MAYOR
Raymond M. Morriss

CITY ADMINISTRATOR
Jeff Rhodes

CITY SOLICITOR
Michael Scott Cohen

COUNCIL
Seth D. Bernard
Richard J. "Rock" Cioni
Eugene T. Frazier
Laurie P. Marchini

CITY CLERK
Marjorie A. Woodring

AGENDA

DATE: April 2, 2019

I. Open Session

1. 6:15 p.m. - Open Session

II. Pledge of Allegiance

III. Roll Call

IV. Proclamations

1. Proclaiming April 28, 2019 as Cumberland Arbor Day
2. Proclaiming Thursday, April 11, 2019 as Choose Civility Day in Cumberland
3. Proclaiming April 2019 as Fair Housing Month in Cumberland

V. Presentations

1. Presentation from Rebecca Vardiman and Dr. Elesha Ruminski regarding the Choose Civility program

VI. Director's Reports

(A) Public Works

1. Utilities Division - Treatment Plants & Central Services monthly reports for February, 2019

VII. Approval of Minutes

1. Approval of the Regular Session Minutes of February 19, 2019

VIII. Public Hearings

1. Public Hearing - Mayor and City Council to receive staff recommendations for 2019 CDBG project funding

IX. New Business

(A) Ordinances

1. Ordinance (*1st Reading*) - providing for the closure of a portion of a street known as Locust Alley, lying between lands owned by ARC Cumberland, LLC and First Peoples Community FCU, upon the request of First Peoples Community FCU

(B) Orders (Consent Agenda)

1. Order re-appointing Gregory Powell to the Parks and Recreation Board for a 5-year term effective 4/2/19 through 4/2/24
2. Order authorizing execution of a Contract of Sale with Yeger Holdings, LLC for property at 607 Maryland Avenue (Tax Acct. 04-038703) for the purchase price of $25,000 provided settlement contingencies are met and authorizing execution of documents to effect the transfer
3. Order authorizing the Engineering Department to move forward with the New Baltimore St. Town Center Project (12-16-M) incorporating design elements presented by Cochran Studio, Inc., with the contingencies that 1) final design be brought before the Mayor and Council for approval, and 2) funding acceptable to the Mayor and Council is available to complete the project as presented
4. Order authorizing the execution of Change Order No. 4 to the current contract with Leonard S. Fiore for the "Phase 1 CSO Storage Facility at WWTP" project (1-10-WWTP) for the increased amount of $21,523.46, bringing the new total contract price to $26,362,036.05, with work being contingent upon approval form the MD Department of the Environment
5.

Order approving the Community Legacy Central Business District Facade Improvement application for 128 Bedford Street for the amount of $4,987.50

6. Order authorizing the award of $31,817.00 in Community Legacy Funds through the Leasehold Improvement Program to three projects located in the Central Business District: 70 Pershing Street - $13,125.00; 206 N. Centre Street - $9,346.00; and 208 N. Centre Street - $9346.00

X. Public Comments

All public comments are limited to 5 minutes per person

XI. Adjournment

Regular Council Agenda
April 2, 2019

Description
6:15 p.m. - Open Session

Approval, Acceptance / Recommendation

☐ Budgeted

☐ 1st Reading
☐ 2nd Reading
☐ 3rd Reading

Value of Award (if applicable)

Source of Funding (if applicable)

Regular Council Agenda
April 2, 2019

Description
Proclaiming April 28, 2019 as Cumberland Arbor Day

Approval, Acceptance / Recommendation

☐ Budgeted

☐ 1st Reading
☐ 2nd Reading
☐ 3rd Reading

Value of Award (if applicable)

Source of Funding (if applicable)

City of Cumberland

~ MARYLAND ~

Proclamation

WHEREAS, *The City of Cumberland recognizes the importance of protecting our environment by planting, protecting, and caring for the trees in our community; and*

WHEREAS, *The Cumberland Shade Tree Commission and the City of Cumberland have worked together to create a greater awareness within our community of the valuable asset trees provide and the need to promote tree practices that will create a healthy urban forest that can be enjoyed by future generations; and*

WHEREAS, *Numerous communities in Maryland participate in natural resources conservation programs involving trees, soil conservation, and programs to improve the health of the Chesapeake Bay region, and the Mayor and City Council of Cumberland feel that it is the responsibility of our city to share in these efforts to protect our environment and natural resources; and*

WHEREAS, *Through the efforts of the Shade Tree Commission to preserve and improve the health of our urban forest, the City of Cumberland has been distinguished as a Tree City USA for 21 years by the National Arbor Day Foundation, as well as a "Maryland PLANT Community" by the Maryland Urban and Community Forestry Council for 27 years.*

Now, Therefore, the Mayor and City Council of Cumberland,

do hereby proclaim April 28, 2019 to be

"Cumberland Arbor Day"

Given under our Hands and Seals this 2nd day of April, in the Year 2019,
with the Corporate Seal of the City of Cumberland hereto attached,
duly Attested by the City Clerk.

ATTEST:

MAYOR AND CITY COUNCIL OF CUMBERLAND

Marjorie A. Woodring
City Clerk

Raymond M. Morriss
Mayor

Regular Council Agenda
April 2, 2019

Description
Proclaiming Thursday, April 11, 2019 as Choose Civility Day in Cumberland

Approval, Acceptance / Recommendation

☐ Budgeted

☐ 1st Reading
☐ 2nd Reading
☐ 3rd Reading

Value of Award (if applicable)

Source of Funding (if applicable)

Regular Council Agenda
April 2, 2019

Description
Proclaiming April 2019 as Fair Housing Month in Cumberland

Approval, Acceptance / Recommendation

☐ Budgeted

☐ 1st Reading
☐ 2nd Reading
☐ 3rd Reading

Value of Award (if applicable)

Source of Funding (if applicable)

City of Cumberland

~ MARYLAND ~

Proclamation

WHEREAS, *the City of Cumberland is proud to join the U. S. Department of Housing and Urban Development in celebrating the forty-ninth anniversary of the Fair Housing Act of 1968; and*

WHEREAS, *the 1968 Fair Housing Act, which guarantees the right of all Americans to dwell in the neighborhood of their choice, is one of the most important components of our national civil rights policy; and*

WHEREAS, *although this non-discriminatory policy is the law of the land, its proper enforcement requires the continued cooperation of all levels of government as well as the real estate and homebuilding industries, and private citizens; and*

WHEREAS, *throughout Maryland, this spirit of cooperation is being provided through the efforts of our state, federal and local governments and with the support of countless community and nonprofit organizations; and*

WHEREAS, *equal housing opportunity has a dramatic impact on school integration and the acceptance and understanding of ethnic and racial diversity; and*

WHEREAS, *promoting equal housing opportunity is essential to our larger mission of promoting justice in all areas of life for all citizens.*

Now, Therefore, the Mayor and City Council of Cumberland,
do hereby proclaim the month of April 2019 in the City of Cumberland as

"FAIR HOUSING MONTH"

Given under our Hands and Seals this 2nd Day of April, in the Year 2019, with the Corporate Seal of the City of Cumberland Hereto Attached, Duly Attested by the City Clerk.

ATTEST:

Marjorie A. Woodring
City Clerk

MAYOR AND CITY COUNCIL OF CUMBERLAND

Raymond M. Morriss
Mayor

Regular Council Agenda
April 2, 2019

Description
Presentation from Rebecca Vardiman and Dr. Elesha Ruminski regarding the Choose Civility program

Approval, Acceptance / Recommendation

☐ Budgeted

☐ 1st Reading
☐ 2nd Reading
☐ 3rd Reading

Value of Award (if applicable)

Source of Funding (if applicable)

Regular Council Agenda
April 2, 2019

Description

Approval, Acceptance / Recommendation

☐ Budgeted

☐ 1st Reading
☐ 2nd Reading
☐ 3rd Reading

Value of Award (if applicable)

Source of Funding (if applicable)

Regular Council Agenda
April 2, 2019

Description
Utilities Division - Treatment Plants & Central Services monthly reports for February, 2019

Approval, Acceptance / Recommendation

☐ Budgeted

☐ 1st Reading
☐ 2nd Reading
☐ 3rd Reading

Value of Award (if applicable)

Source of Funding (if applicable)

CITY OF CUMBERLAND

MONTHLY REPORTS

Water Filtration Plant &
John J. Difonzo
Water Reclamation Facility
and Central Services

CITY OF CUMBERLAND'S WATER TREATMENT PLANT

MONTHLY UTILITY REPORT

FEBRUARY 2019

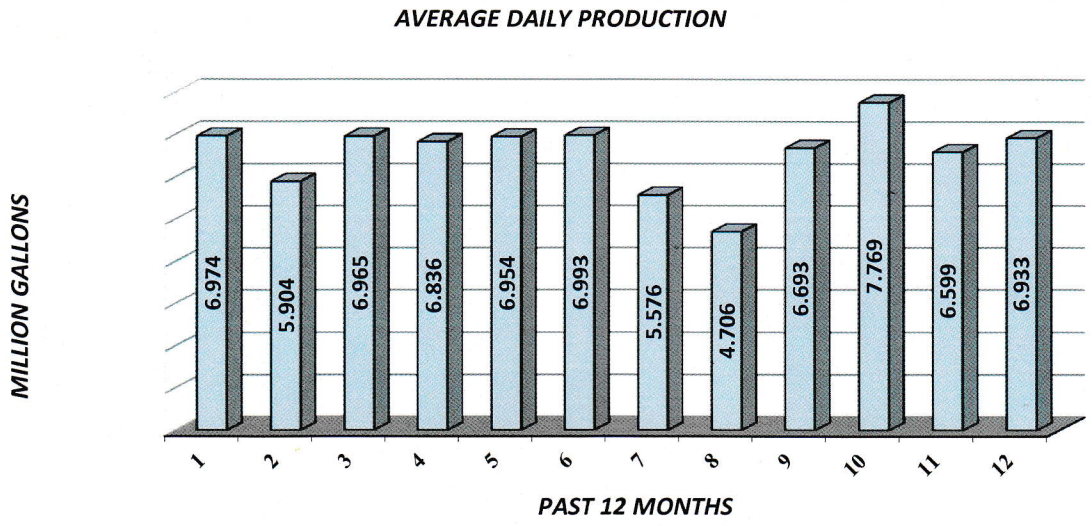

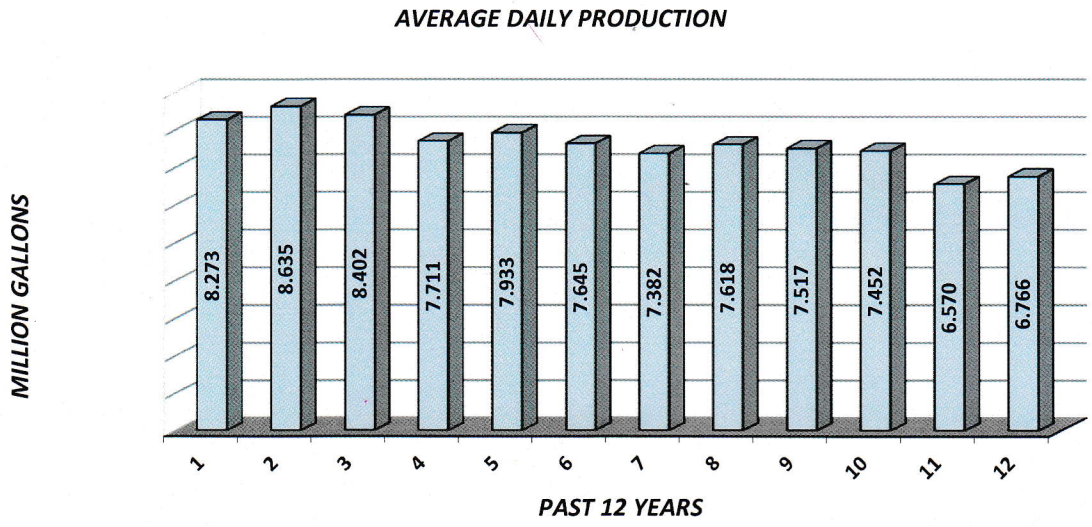

BRIEF LISTING of EVENTS

- *100% COMPLIANCE WITH ALL FEDERAL & STATE DRINKING WATER REGULATIONS*
- *OVER 100 PREVENTIVE MAINTENANCE TASKS COMPLETED/1,300 WATER ANALYSIS PERFORMED*
- *TREATMENT PLANT, PUMPING STATIONS, TANKS AND RESERVOIRS OPERATED/MAINTAINED CONTINUOUSLY 365/24/7*
- *CONTINUED UNREGULATED CONTAMINATE MONITORING ROUND 4*
- *PASSED OUR ANNUAL NPDES INSPECTION PERFORMED BY PA DEP WITH ZERO PERMIT VIOLATIONS*
- *BOTH LAKE GORDON AND LAKE KOON AT 100% CAPACITY*
- *RECEIVED/REVIEWED PROPOSALS FOR MEMBRANE PILOT STUDY(WITH ENGINEERING)*

Wastewater Treatment Plant – February 2019

OPERATIONS:

Treated 548,912,000 gallons @ an average of 19.604 million gallons per day. Removed 181,289 pounds of total suspended solids, 130,473 pounds of BOD, 26,094 pounds of total nitrogen, and 3,663 pounds of total phosphorous. Processed 621,838 gallons of sludge producing 59.35 Dry tons of Class "A" bio-solids. All Federal and State reporting requirements were in compliance. Monthly Flow Comparison Chart is attached.

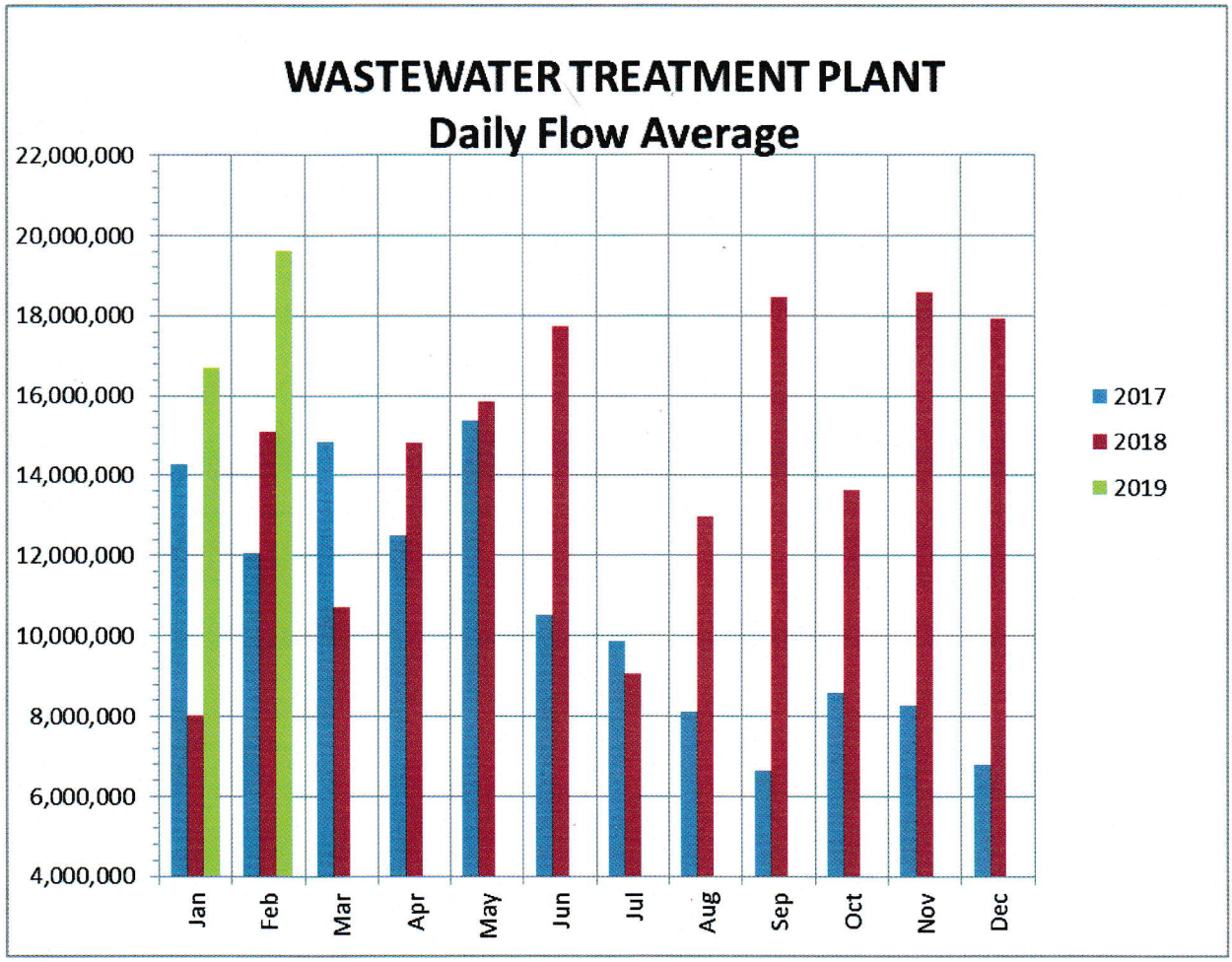

Central Services – February 2019

- **City Hall**: Built and installed shelves in City Clerk office vault. Replaced blinds and painted Mayors office. Moved table from Mayor Office to Council chambers. Repaired heating system water leak and removed air from the system multiple times. Work on getting counts of fan coil units and footage of piping system for engineering for bids to replace it. Fire alarm test. Work on installing new coat rack for Mayors Office. Moved file cabinets for CD in basement.

- **Municipal Service Center**: Replaced flu pipe on gas tube heaters. Repaired heat shields on gas tube heaters. Repaired large garage door in rear of building. Fire alarm and sprinkler test. New phone line installed for fire alarm system.

- **Public Safety Building:** Worked with contractors on install of new kitchen for Fire Department. Installed all new outlets and drawer handles for new kitchen at Fire Department. Install new TV in police department. Replace section of sewer drain pipe in police garage that was leaking. Patched and painted walls were new hand towels dispensers were installed. Repaired hot water in women's locker room second floor police side.

- **Snow removal**: City Hall, PSB, Baltimore St. bridge and Frederick St. Bedford St. bridge sidewalks

- **Downtown Area & Mall:** Repaired lights in alley between C-Biz. Repaired lights on mall between Liberty St. and Mechanic St. Removed X-mass tree decorations and mall decorations. Removed X-mas tree.

- **Sewer department:** Worked on push camera and tractor camera. Installed new lights in break room at WWTP.

- **Traffic and Street Lights**: Placed lights in and out of flash before and after snow. Replaced motion detector at Greene St and Fayette St intersection because of high winds. Reported street lights to be repaired to Potomac Edison.

- Load tested generators.

- Monthly Safety Meeting

Regular Council Agenda
April 2, 2019

Description
Approval of the Regular Session Minutes of February 19, 2019

Approval, Acceptance / Recommendation

☐ Budgeted

☐ 1st Reading
☐ 2nd Reading
☐ 3rd Reading

Value of Award (if applicable)

Source of Funding (if applicable)

MAYOR
Raymond M. Morriss

CITY ADMINISTRATOR
Jeff Rhodes

CITY SOLICITOR
Michael Scott Cohen

COUNCIL
Seth D. Bernard
Richard J. "Rock" Cioni
Eugene T. Frazier
Laurie P. Marchini

CITY CLERK
Marjorie A. Woodring

MINUTES

DATE: February 19, 2019

I. Closed Session

1. 5:00 p.m. - Convene in Open Session for the purpose of closing the meeting for an Executive Session pursuant to Section 3-305(b)(1), (7) and (14) of the General Provisions Article of the Annotated Code of Maryland to discuss board and commission appointments and matters related to the City Solicitor's contract, to consult with counsel to obtain legal advice, and to discuss matters related to the bids for trash hauling and recycling

   Motion to move into closed session was made by Bernard, seconded by Cioni, and approved on a vote of 5-0.

2. Executive Session

II. Open Session

1. 6:15 p.m. - Reconvene into Open Session

   Mayor Morriss reconvened the meeting in open session at 6:15 p.m.

III. Pledge of Allegiance

IV. Roll Call

PRESENT: Raymond M. Morriss, President; Council Members Seth Bernard; Richard J. "Rock" Cioni, Eugene Frazier, and Laurie P. Marchini

ALSO PRESENT: Jeffrey D. Rhodes, City Administrator; Michael S. Cohen, City Solicitor; Charles Hinnant, Chief of Police; Donald Dunn, Fire Chief; Marjorie Woodring, City Clerk; David Caporale, County Commissioner

V. Statement of Closed Meeting

1. Summary Statement of Closed Meeting

Mayor Morriss announced that a Closed Session had been held on February 19, 2019 at 5:00 p.m. and read into the record a summary of that session, which is attached hereto and made a part of these minutes as required under Section 3-306 (c)(2) of the General Provisions Article of the Annotated Code of Maryland.

VI. Director's Reports

(A) Public Works

1. Maintenance Division monthly report for January, 2019

Motion to approve the report was made by Bernard, seconded by Frazier, and was passed on a vote of 5-0.

2. Utilities Division-Treatment Plants monthly report for January, 2019

Motion to approve the report was made by Bernard, seconded by Frazier, and was passed on a vote of 5-0.

3. Utilities Division -Flood/Water/Sewer monthly report for January, 2019

Motion to approve the report was made by Bernard, seconded by Frazier, and was passed on a vote of 5-0.

(B) Fire

1. Fire Department monthly report for January, 2019

Motion to approve the report was made by Bernard, seconded by Frazier, and was passed on a vote of 5-0.

(C) Police

1. Police Department monthly report for January, 2019

Motion to approve the report was made by Bernard, seconded by Frazier, and was passed on a vote of 5-0.

VII. Approval of Minutes

1. Approval of the Regular Session Minutes of December 4 and 18, 2018

Motion to approve the minutes was made by Bernard, seconded by Marchini, and was passed on a vote of 5-0.

VIII. Approval of Minutes

1. Approval of the Closed Session Minutes of September 4, November 8, and November 20, 2018

   Motion to approve the minutes was made by Bernard, seconded by Cioni, and was passed on a vote of 5-0.

IX. New Business

(A) Charter Amendment Resolutions

1. Charter Amendment Resolution *(1st reading)* - to repeal and reenact with amendments Charter Section 24 pertaining to the publication of ordinances, when ordinances take effect, and the admissibility of codification in evidence

   Mr. Rhodes reviewed the Charter Amendment Resolution that would repeal Charter Section 75 pertaining to carrying concealed weapons. Solicitor Cohen added that this is essentially a matter of State Law and should not be in the City's Charter.

   The Charter Amendment Resolution was presented in Title only for its first reading. Mayor Morriss called for questions or comments. Motion to approve the first reading and table for two weeks was made by Bernard, seconded by Cioni, and was passed on a vote of 5-0

2. Charter Amendment Resolution *(1st reading)* - to repeal Charter Section 75 pertaining to carrying concealed weapons as prohibitions against carrying concealed weapons are set forth Section 4-101 of the Criminal Law Article of the Annotated Code of Maryland

   Mr. Rhodes reviewed the Charter Amendment Resolution that would repeal and reenact with amendments Charter Section 24 pertaining to the publication of ordinances. Solicitor Cohen added that under the current version of the Charter the City is required to publish statues that impose any sort of penalty for three separate days in a newspaper in the City. When passed, this Charter Amendment Resolution will no longer require the City to publish the full text of the ordinance, and instead post a fair summary, along with only being published in a newspaper for one day.

   The Charter Amendment Resolution was presented in Title only for its first reading. Mayor Morriss called for questions or comments. Motion to approve the first reading and table for two weeks was made by Cioni, seconded by Bernard, and was passed on a vote of 5-0

3. Charter Amendment Resolution *(1st reading)* - to repeal Charter Sections 192 - 203 pertaining to the City's governance of the former Memorial Hospital

   Mr. Rhodes reviewed the Charter Amendment Resolution that would repeal Charter Sections 192-203 pertaining to the City's governance of the former Memorial Hospital. Solicitor Cohen added that since the hospital no longer exists, the Charter provisions are inapplicable and should be removed.

The Charter Amendment Resolution was presented in Title only for its first reading. Mayor Morriss called for questions or comments. Motion to approve the first reading and table for two weeks was made by Frazier, seconded by Cioni, and was passed on a vote of 5-0

(B) Orders (Consent Agenda)

Mr. Rhodes reviewed each item on the Consent Agenda prior to vote and Mayor Morriss called for questions or comments. Motion to approve Consent Agenda items 1 - 10 was made by Frazier, seconded by Bernard, and was passed on a vote of 5-0.

1. Order accepting the report from the City Administrator advising that with regard to the public right of way closure for a portion of Second Street, approved by Ordinance No. 3846 and initiated by the Housing Authority for the City of Cumberland, there were no damages caused to the adjacent property owner, that being the Housing Authority, and that any apparent added benefit would be determined by the MD Dept. of Assessment and Taxation

   ORDER NO. 26,406

2. Order authorizing the execution of a Donation Agreement with Friends Aware, Inc. to transfer to the City property known as 424 Goethe Street (Allegany Co. Land Records Book 2280, page 489) for the amount of $1.00 and authoring execution of documentation necessary for the transfer

   Mr. Rhodes advised that the City had transferred this property to Friends Aware, Inc. a couple of years ago, but now there were returning it due to their concern that they may not be able to successfully complete the rehabilitation of the property. He added that hopefully the City can find another home for it.

   ORDER NO. 26,407

3. Order authorizing program amendments to the Community Development Block Grant Program effective retroactive to February 6, 2019

   ORDER NO. 26,408

4. Order lifting Code Section 11-113 to allow open containers of alcohol for the 2019 Hooley Pub Crawl beginning 12:00 p.m. on March 16th and ending 2:00 a.m. on March 17th within certain areas of the downtown; notwithstanding that open glass containers shall not be permitted

   ORDER NO. 26,409

5. Order adopting a Sick and Safe Leave Policy for employees of the City

   ORDER NO. 26,410

6. Order appointing individuals to the Downtown Development Commission, Historic Preservation Commission, Human Relations Commission and the Parks and Recreation Board

   ORDER NO. 26,411

7. Order authorizing the Chief of Police to accept funds from the Allegany County Board of Education received through the FY19 Safe Schools Fund grant in the amount of $23,080 to provide school safety education advertisements and officer overtime, and to perform ALICE training and school safety patrols; and authorizing an appropriation to the FY19 General Fund Public Safety Budget in the amount of $23,080 bringing the revised FY19 GF Public Safety Budget to $10,957,479

   ORDER NO. 26,412

8. Order declaring certain furniture in the Engineering Department as surplus.

   ORDER NO. 26,413

9. Order authorizing execution of a MOU with the Western MD Health System Corp. pertaining to the staffing of on-duty law enforcement personnel at the hospital on a non-mandatory overtime basis, with the WMHS paying 175% of the base hourly rate for each officer

   ORDER NO. 26,414

10. Order authorizing execution of a contract with the Allegany Museum pertaining to the Museum's receipt of $50,000 in Community Legacy Funding for the Allegany Museum Interior Restoration Work Project (SRP-CL-2019-Cumberland-00129)

    Mr. Rhodes advised that the Community Legacy funding would be used for improvements to the acoustics in the ball room of the museum, and would also allow for the installation of the Memorial Hospital portico that the City was able to salvage from the hospital when it was being demolished.

    ORDER NO. 26,415

X. Public Comments

Nick Gelles, 317 Pearl Avenue, spoke about his displeasure of nothing being done regarding the cars at the Taccino property and the stop signs at the intersection, and discussed concerns with safety at that intersection.

Donna Hickson, 1330 Industrial Boulevard, spoke on her trips to Annapolis regarding the $15 minimum wage issue, and that she feels it will be detrimental to local businesses.

Dave Caporale, County Commissioner, 815 Elmwood, read a unanimous letter from the County that was submitted to the House and Senate expressing opposition to the upcoming $15 minimum wage bill. He also commented on the impact to his personal business of 113 years, and stated it would put them at a clear disadvantage. He added that a huge number were going to down to the Senate Hearing, and spoke of the vast difference in economics throughout the state, and that mainly the rural counties would be affected most by the bill. There was also a suggestion of proposing a waiver, if the bill passes. The Mayor offered the City's support and thanked Caporale for his efforts.

Kenneth Wilmot, 513 Fort Avenue, expressed concern over dogs in public places.

All public comments are limited to 5 minutes per person

XI. Adjournment

With no further business at hand, the meeting adjourned at 6:56 p.m.

Minutes approved on _____

Raymond M. Morriss, Mayor _____

ATTEST: Marjorie A. Woodring, City Clerk _____

Regular Council Agenda
April 2, 2019

Description

Public Hearing - Mayor and City Council to receive staff recommendations for 2019 CDBG project funding

Approval, Acceptance / Recommendation

☐ Budgeted

☐ 1st Reading
☐ 2nd Reading
☐ 3rd Reading

Value of Award (if applicable)

Source of Funding (if applicable)

2019 Community Development Block Grant

ANNUAL PLAN PROJECT RECOMMENDATIONS

CDBG OVERVIEW

- 5 YEAR PLAN (2015-2019)
- 2019 ANNUAL PLAN PROCESS
- TIMELINE
- APPLICATION REVIEW CRITERIA
- $710,000 ESTIMATED AWARD FROM THE DEPT OF HOUSING AND URBAN DEVELOPMENT

Proposed Projects by Category

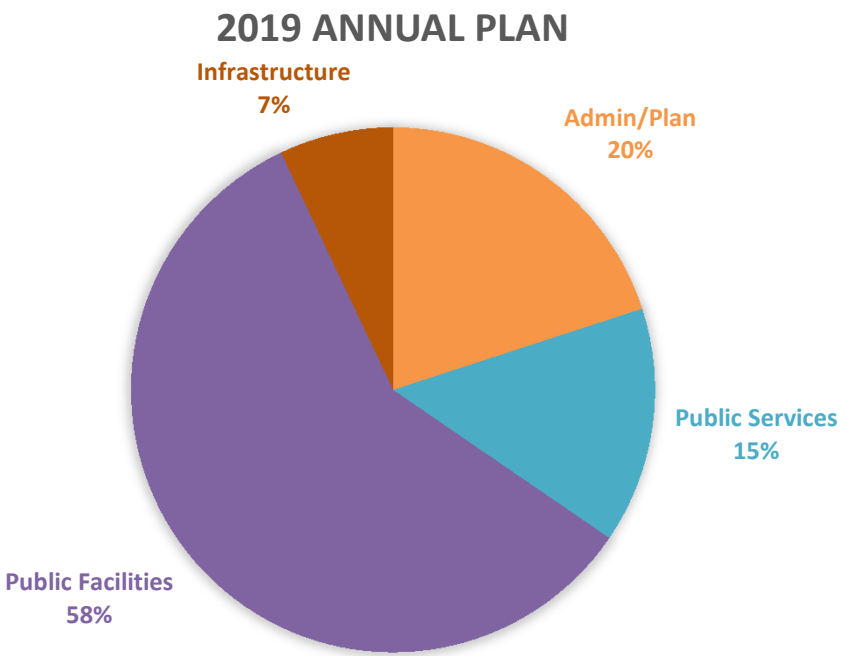

Public Facilities/Infrastructure

HACC Ft Cumberland Homes Sidewalk Improvements	$50,000
ACM ADA WEX Program Loft Lift Project	$40,000
YMCA Gilcrist Ph 5 Rehabilitation	$77,000
YMCA Riverside Roofing/Fence Rehab	$270,750
Constitution Pk, Grove 4 Inclusive Playground	$27,000
Bellevue Sidewalk Improvements Ph2	Contingent
Subtotal	$464,750

Public Services

Associated Charities Long Term Prescription	$8,750
Associated Charities Short Term Prescription	$7,800
Summer @ Your Library: S. Cumberland	$2,000
Incredible Years & Dina Parenting Program	$10,000
Associated Charities Food Pantry	$3,200
FCRC Shelter for Victims of Dom Viol/Sexual Assault	$10,500
HRDC Emerg Housing/Homeless Prevention	$25,000
AHEC Dental Access	$8,000
AHEC Denture Program	$7,000
Horizon Goodwill Job Training Program	$21,000
Subtotal	$103,250

PUBLIC COMMENTS ACCEPTED THROUGH

TUESDAY, APRIL 16, 2019

COMMENTS TO: 57 N. LIBERTY STREET, DEPT OF COMMUNITY DEVELOPMENT, CUMBERLAND, MD 21502

Regular Council Agenda
April 2, 2019

Description

Ordinance (*1st Reading*) - providing for the closure of a portion of a street known as Locust Alley, lying between lands owned by ARC Cumberland, LLC and First Peoples Community FCU, upon the request of First Peoples Community FCU

Approval, Acceptance / Recommendation

☐ Budgeted

☑ 1st Reading
☐ 2nd Reading
☐ 3rd Reading

Value of Award (if applicable)

Source of Funding (if applicable)

ORDINANCE NO. _____

AN ORDINANCE OF THE MAYOR AND CITY COUNCIL OF CUMBERLAND, MARYLAND, ENTITLED "AN ORDINANCE TO PROVIDE FOR THE CLOSURE OF A PORTION OF A STREET KNOWN AS LOCUST ALLEY, RUNNING FROM THE NORTHWEST CORNER OF A SIDEWALK RUNNING PARALLEL WITH THE WEST SIDE OF ELM STREET 100 +/- FEET ALONG THE EASTERN SIDE OF THE PORTION OF LOCUST ALLEY BEING CLOSED, THEN RUNNING EAST ON THE SOUTHERN SIDE OF THE PORTION OF THE ALLEY BEING CLOSED 150 +/- FEET, THE PORTION OF THE ALLEY BEING CLOSED LYING BETWEEN THE LANDS OWNED BY ARC CUMBERLAND, LLC (AS DESCRIBED IN THE DEED RECORDED AMONG THE LAND RECORDS OF ALLEGANY COUNTY, MARYLAND IN DEED LIBER 656, FOLIO 789) AND FIRST PEOPLES COMMUNITY FEDERAL UNION (AS DESCRIBED IN THE DEEDS RECORDED AMONG THE LAND RECORDS OF ALLEGANY COUNTY, MARYLAND BOOK 2348, PAGE 401, BOOK 2329, PAGE 252, BOOK 2353, PAGE 67, BOOK 2332, PAGE 97 AND BOOK 2332, PAGE 93) THE PORTION OF SAID ALLEY BEING CLOSED BEING LOCATED IN THE CITY OF CUMBERLAND, MARYLAND."

WHEREAS, the Mayor and City Council of Cumberland received a petition from First Peoples Community Federal Credit Union, requesting the closure of the portion of Locust Alley generally described in the titling of this Ordinance;

WHEREAS, the City Clerk served a personal notice in writing upon each property owner to be affected by the passage of the proposed Ordinance more than ten (10) days before _____;

WHEREAS, in the opinion of the Mayor and City Council of Cumberland, the public welfare and convenience require that the aforesaid portion of the aforesaid street be closed; and

WHEREAS, in that ARC Cumberland, LLC and First Peoples Community Federal Credit Union own the parcels of property adjacent to each side of the portion of the alley being closed by this Ordinance, the portion of the alley being closed will be divided in half along its centerline, with ARC Cumberland, LLC and First Peoples Community Federal Credit Union each receiving the half of the alley which is closest to their respective lands.

NOW, THEREFORE, BE IT ORDAINED BY THE MAYOR AND CITY COUNCIL OF CUMBERLAND AS FOLLOWS:

SECTION 1: The portion of Locust Alley described in the metes and bounds description attached hereto as Exhibit A and shown on the plat attached hereto as Exhibit B shall be closed and conveyed from the City to ARC Cumberland, LLC as provided for hereinafter, and the portion of Locust Alley described in the metes and bounds

description attached hereto as Exhibit C and the plat attached hereto as Exhibit D shall be closed and conveyed to First Peoples Community Federal Credit Union as provided for hereinafter. These conveyances are subject to the easements, reservations and restrictions set forth in the Exhibit E attached hereto, which easements, reservations and restrictions shall be incorporated into the deeds effecting the conveyances described in this paragraph.

SECTION 2: The said Mayor and City Council of Cumberland shall ascertain whether any and what amount in value of damage shall be caused by the aforesaid closure for which the owners or possessors of any property located along Locust Alley, or portions thereof, should be compensated, and shall assess and levy generally on the property of the persons benefitted by the closure of the street the whole or any part of the expense which shall be incurred in closing the same.

SECTION 3: The City Administrator or his designee shall, within fifteen (15) days of the passage of this Ordinance, submit a report to the City Clerk setting forth his findings regarding what amount of damages, if any, shall have been caused by the aforesaid closure of the portion of Locust Alley described herein, and the names of the owners or possessors of such property along which said streets now pass, and the amount of damages for which they shall be compensated or benefits for which they shall be assessed, and whether said damages arising from the closure shall be assessed generally on the whole assessable property within the City of Cumberland or specially on the property of the person benefitted by the closure; and, in the event of any of said damages being assessed and levied in whole or in part on any property of the persons benefitted, the names of the owners of the property specially benefitted, with a description of said property by reference to the Land Records of Allegany County, and the amount so levied and assessed. The Mayor and City Council shall consider the matter of the City Administrator's report and shall make determinations regarding the subject matter of the report at a meeting held no sooner than fifteen (15) days after the date of the passage of this Ordinance.

SECTION 4: Any person feeling aggrieved or injured by the decision of said Mayor and City Council of Cumberland regarding the subject matter of the aforereferenced report shall have the right of an appeal to the Circuit Court at a trial by jury, as provided in Section 128 of the Charter of the City of Cumberland (1991 Edition), upon filing a written notice of appeal with the City Clerk within thirty (30) days after the Mayor and City Council of Cumberland shall have made their return.

SECTION 5: The benefits assessed by said Mayor and City Council of Cumberland shall be liens upon the property of the persons benefitted to the extent of such assessment, and shall be payable within sixty (60) days after the date of the meeting at which the Mayor and City Council of Cumberland makes its determinations regarding the subject matter set forth in the City Administrator's report, and the collection of the same shall be enforced by *scire facias* in the same manner as paving liens are collected by the Mayor and City Council; and a written record of the said Mayor and City Council's determinations shall be filed for record and reported in the Mechanics' Lien

Record in the Clerk's Office in the Circuit Court for Allegany County, and the assessment therein shall be liens upon the properties respectively assessed from the time of such recording, such recording to be effected no sooner than the expiration of the aforesaid sixty (60) day period.

SECTION 6: Upon the collection of all benefits assessed and the payment of the damages ascertained, or the waiver of this provision by the parties interested, if applicable, the said portions of Locust particularly described in Section 1 hereof shall be closed and the Mayor shall be empowered to execute the deeds effecting the conveyances which are described in Section 1 hereof.

SECTION 7: This Ordinance shall take effect from the date of its passage.

Passed, the ____ day of _____, 2019.

_____
Raymond M. Morriss, Mayor

ATTEST:

_____
Marjorie A. Woodring, City Clerk

EXHIBIT A

LEGAL DESCRIPTION
MAYOR AND CITY COUNCIL OF CUMBERLAND
TO
ARC CUMBERLAND, LLC

ALL that piece or parcel of land situated in the City of Cumberland, Election District No. 04-002, Allegany County, Maryland, and being more particularly described as follows [Maryland State Grid NAD83 Meridian courses and horizontal measurements being used thru out] to wit:

BEGINNING for the same at a 5/8" iron pin with cap set on the westerly right of way margin of Elm Street, said iron pin being the end of the first line of Parcel 1, of a deed dated January 30, 2004, from ARC Cumberland, LLC to the Mayor and City Council of Cumberland, recorded in deed Liber 727, Folio 624, among the Land Records of Allegany County, Maryland, thence leaving Elm Street and running with the entire second, entire third, and part of the fourth line thereof;

1. North 65 degrees 40 minutes 03 seconds West 113.14 feet to a 5/8" iron pin with cap set, thence;

2. North 08 degrees 16 minutes 28 seconds West 12.48 feet to a 5/8" iron pin with cap set, thence;

3. North 24 degrees 21 minutes 37 seconds East 169.50 feet to a 5/8" iron pin with cap set on the southerly right of way margin of Spring Street, thence with Spring Street;

4. South 65 degrees 38 minutes 29 seconds East 10.00 feet to a point, thence leaving Spring Street;

5. South 24 degrees 21 minutes 37 seconds West 165.03 feet to a point, thence;

6. South 65 degrees 40 minutes 03 seconds East 109.82 feet to a point on the westerly right of way margin of Elm Street, thence with Elm Street;

7. South 24 degrees 09 minutes 46 seconds West 14.98 feet to the place of beginning, containing 0.078 acres, more or less, and as shown on a Plan of Survey plat prepared for ARC Cumberland, LLC, dated February 11, 2019, attached hereto and intended to be made a part hereof.

EXHIBIT C

LEGAL DESCRIPTION
MAYOR AND CITY COUNCIL OF CUMBERLAND
TO
FIRST PEOPLES COMMUNITY FEDERAL CREDIT UNION

ALL that piece or parcel of land situated in the City of Cumberland, Election District No. 04-002, Allegany County, Maryland, and being more particularly described as follows [Maryland State Grid NAD83 Meridian courses and horizontal measurements being used thru out] to wit:

BEGINNING for the same at a point on the westerly right of way margin of Elm Street, said point being the end of the first line of a deed dated December 15, 2017, from John P. Alderton and Regina Alejandra Giampaoli Alderton to First Peoples Community Federal Credit Union, recorded in deed Liber 2348, Folio 401, among the Land Records of Allegany County, Maryland, thence running with Elm Street;

1. South 25 degrees 30 minutes 29 seconds West 9.96 feet to a point, thence;

2. South 24 degrees 09 minutes 46 seconds West 5.02 feet to a point, thence leaving Elm Street;

3. North 65 degrees 40 minutes 03 seconds West 109.82 feet to a point, thence;

4. North 24 degrees 21 minutes 37 seconds East 165.03 feet to a point on the southerly right of way margin of Spring Street, thence with Spring Street;

5. South 65 degrees 38 minutes 29 seconds East 10.00 feet to a 5/8” iron pin with cap set, thence leaving Spring Street;

6. South 24 degrees 21 minutes 31 seconds West 150.00 feet to a point at the end of the second line of the aforesaid deed recorded in deed Liber 2348, Folio 401, and running thence with said second line reversed;

South 65 degrees 38 minutes 29 seconds East 100.00 feet to the place of beginning, containing 0.072 acres, more or less, and as shown on a Plan of Survey plat prepared for First peoples Community Federal Credit Union, dated February 11, 2019, attached hereto and intended to be made a part hereof.

EXHIBIT E

EASEMENTS, RESERVATIONS & RESTRICTIONS

SUBJECT, HOWEVER, to an easement in favor of the party of the first part and public and private utilities, including, but not limited to, gas, electric and telephone service providers, for the full length and width of the right-of-way being closed for any existing utility lines, for stormwater and surface drainage and for the installation, inspection, operation, maintenance, repair, replacement and/or relocation of any needed utility lines and stormwater management and sediment and erosion control devices and improvements.

FURTHERMORE, it is a condition of the conveyance effected by this deed that the party of the second part, its successors, and assigns, or other(s) to whom this and the other portions of this right-of-way being closed shall be conveyed shall be allowed to use the surface of the land hereby conveyed; however, it shall not be permitted to place or erect structures or enclosures thereon without the written consent of the party of the first part, which consent may be granted or denied for any reason or no reason at all. The party of the second part's use of the property conveyed by this deed shall not interfere with the ingress, egress or other actions of the party of the first part and public and private utilities, as necessary for the installation, inspection, operation, maintenance, repair, replacement and/or relocation of the aforesaid utilities and appurtenances and improvements related thereto. Furthermore, no such structures or enclosures shall be located or constructed upon the land conveyed by this deed until plans therefore have been submitted to and approved by the party of the first part's Engineering Division, and no work in the construction of such structures or enclosures or in the use of the surface shall injure or disturb the aforesaid utilities and improvements related thereto or in any way interfere with or adversely impact their operation or maintenance.

FURTHERMORE, the party of the second part shall not be permitted to grade the property conveyed under the terms of this deed nor shall it be permitted to alter the surface of the land hereby conveyed, aside from filling potholes, except upon the written consent of the party of the first part, said consent not to be unreasonably withheld.

FURTHERMORE, in the event the party of the second part alters the surface of the land hereby conveyed or the subsurface thereof and said alterations result in the need to relocate public or private utilities' lines and/or other appurtenances and improvements related thereto, the party of the second part shall be liable for all costs associated with the relocation.

FURTHERMORE, the party of the first part, and public and private utilities, shall also have the right to enter upon the property hereby conveyed from time to time to remove, where necessary, such trees and other growths as may be required for the installation, inspection, operation, maintenance, repair, replacement and/or relocation of the aforesaid utility lines and stormwater management and sediment and erosion control devices and improvements related to the foregoing.

IT IS UNDERSTOOD AND AGREED, that the foregoing easements, covenants and restrictions shall be deemed to touch and concern the land, shall run with the title to the land, shall inure to the benefit of the party of the first part and the other parties thereby benefited, and shall be binding upon the party of the second part and all future owners or possessors of all or any of the land hereby conveyed as well as their personal representatives, heirs, successors and assigns, and any and all persons and entities claiming through them.

EXHIBIT B

bba

Surveyors | Engineers | Planners

Bennett Brewer & Associates, LLC
23 East Main Street, Suite 200
Frostburg, MD 21532
Phone 301-687-0494

PLAN OF SURVEY

made for

ARC CUMBERLAND, LLC.

701 - 713 ELM STREET, ELECTION DISTRICT NO. 04-002
CITY OF CUMBERLAND, ALLEGANY COUNTY

MARYLAND

SCALE: 1" = 30'

FEBRARY 11, 2019

TAX MAP	PARCEL	PROJECT No.
109	2320 - 2325	2018044

CRD FILE: 18044	DRAWN: SM	APPROVED: MB	CHECKED: AB/MB

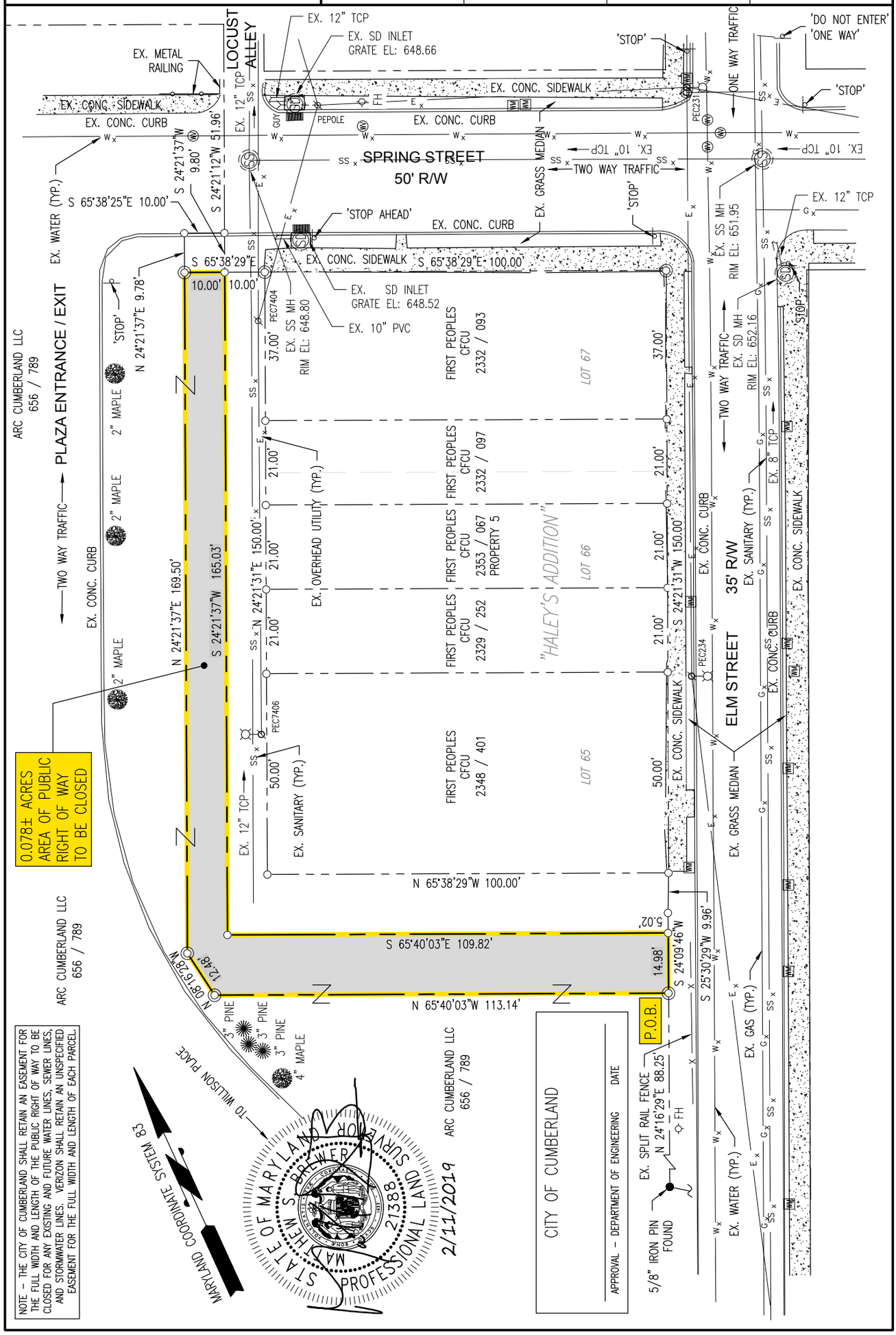

NOTE - THE CITY OF CUMBERLAND SHALL RETAIN AN EASEMENT FOR THE FULL WIDTH AND LENGTH OF THE PUBLIC RIGHT OF WAY TO BE CLOSED FOR ANY EXISTING AND FUTURE WATER LINES, SEWER LINES, AND STORMWATER LINES. VERIZON SHALL RETAIN AN UNSPECIFIED EASEMENT FOR THE FULL WIDTH AND LENGTH OF EACH PARCEL.

CAD FILE: P:\2018\18044 - First Peoples - Elm Street - Cumberland\PLAT ARC.dwg PLOT DATE/TIME: 2/13/2019 - 3:29pm LAST SAVE BY: scott

EXHIBIT D

bba

Surveyors | Engineers | Planners

Bennett Brewer & Associates, LLC
23 East Main Street, Suite 200
Frostburg, MD 21532
Phone 301-687-0494

PLAN OF SURVEY

made for

FIRST PEOPLES COMMUNITY FEDERAL CREDIT UNION

701 - 713 ELM STREET, ELECTION DISTRICT NO. 04-002
CITY OF CUMBERLAND, ALLEGANY COUNTY

MARYLAND

SCALE: 1" = 30'

FEBRARY 11, 2019

TAX MAP	PARCEL	PROJECT No.
109	2320 - 2325	2018044

CRD FILE: 18044	DRAWN: SM	APPROVED: MB	CHECKED: AB/MB

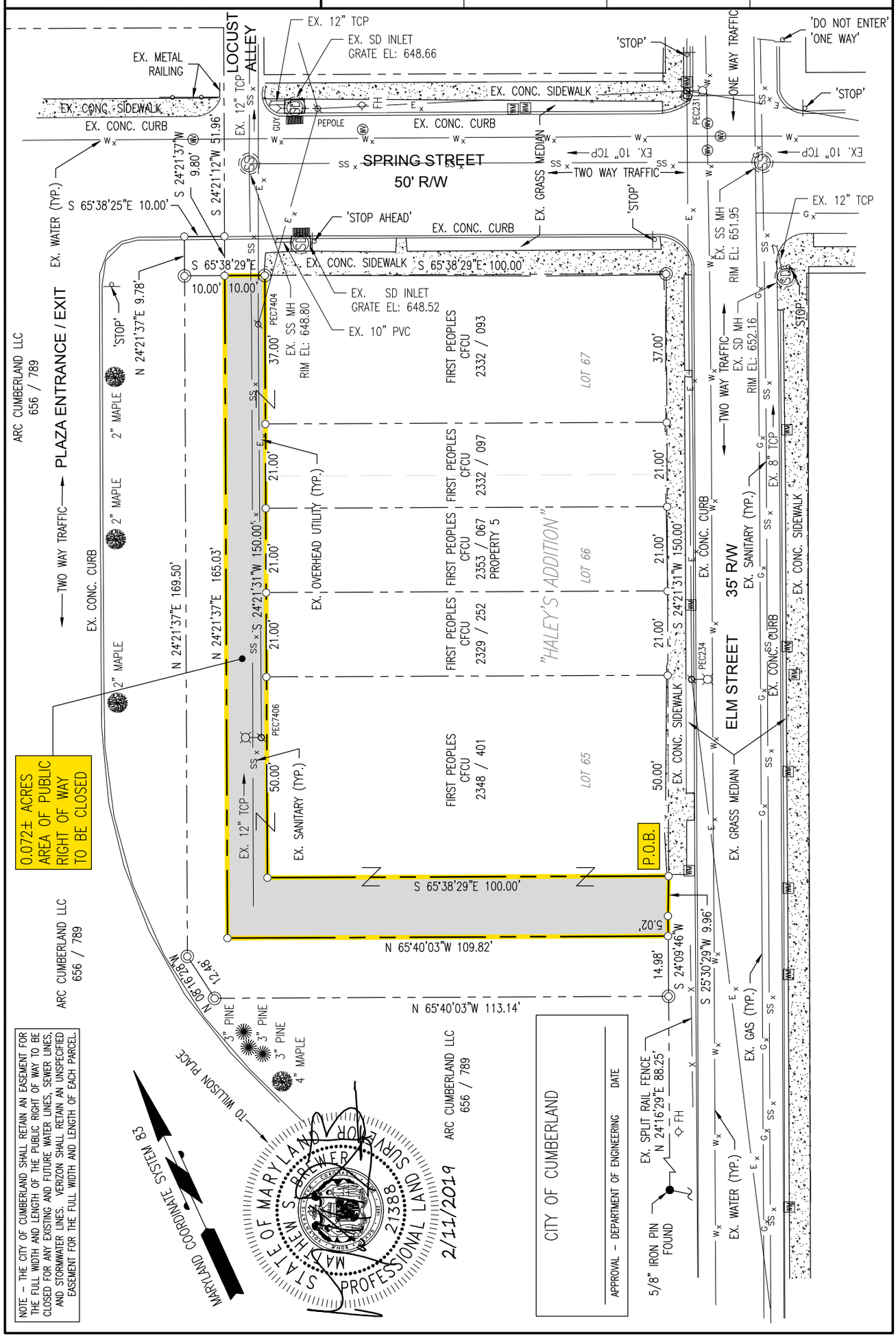

NOTE - THE CITY OF CUMBERLAND SHALL RETAIN AN EASEMENT FOR THE FULL WIDTH AND LENGTH OF THE PUBLIC RIGHT OF WAY TO BE CLOSED FOR ANY EXISTING AND FUTURE WATER LINES, SEWER LINES, AND STORMWATER LINES. VERIZON SHALL RETAIN AN UNSPECIFIED EASEMENT FOR THE FULL WIDTH AND LENGTH OF EACH PARCEL.

CAD FILE: P:\2018\18044 - First Peoples - Elm Street - Cumberland\PLAT FPCCC.dwg PLOT DATE/TIME: 2/13/2019 - 3:22pm LAST SAVE BY: scott

Regular Council Agenda
April 2, 2019

Description

Order re-appointing Gregory Powell to the Parks and Recreation Board for a 5-year term effective 4/2/19 through 4/2/24

Approval, Acceptance / Recommendation

☐ Budgeted

☐ 1st Reading
☐ 2nd Reading
☐ 3rd Reading

Value of Award (if applicable)

Source of Funding (if applicable)

- ORDER -

of the

Mayor and City Council of Cumberland

MARYLAND

ORDER NO. _____ **DATE:** April 2, 2019

ORDERED, By the Mayor and City Council of Cumberland, Maryland

THAT, Gregory Powell be and is hereby reappointed to the Parks and Recreation Board for a five-year term to be effective April 2, 2019 through April 2, 2024.

_____

Raymond M. Morriss, Mayor

July 30, 2018

Mayor and City Council of Cumberland MD

I would like to continue my membership on the Recreation Advisory Board.

I have served several terms and wish to continue to work in the same capacity.

Thank you for this opportunity

Sincerely,

Greg Powell

Regular Council Agenda
April 2, 2019

Description

Order authorizing execution of a Contract of Sale with Yeger Holdings, LLC for property at 607 Maryland Avenue (Tax Acct. 04-038703) for the purchase price of $25,000 provided settlement contingencies are met and authorizing execution of documents to effect the transfer

Approval, Acceptance / Recommendation

☐ Budgeted

☐ 1st Reading
☐ 2nd Reading
☐ 3rd Reading

Value of Award (if applicable)

Source of Funding (if applicable)

- Order -

of the

Mayor and City Council of Cumberland

MARYLAND

ORDER NO. _____ **DATE:** April 2, 2019

ORDERED, By the Mayor and City Council of Cumberland, Maryland

THAT the Mayor be and is hereby authorized to execute a Contract of Sale by and between the Mayor and City Council of Cumberland ("Buyer") and Yeger Holdings, LLC ("Sellers") for the property and improvements thereon located at 607 Maryland Avenue, Cumberland, as recorded among the Land Records of Allegany County, Maryland in Records Book 2114, Page 283, Tax Account No. 04-038703, for the purchase price of Twenty-five Thousand Dollars and No Cents ($ 25,000.00); and

BE IT FURTHER ORDERED, that the City shall accept the deed effecting the transfer of said property, provided settlement contingencies are met; and

BE IT FURTHER ORDERED, that the City Administrator and City Solicitor are jointly and severally granted the authority to execute and deliver such documents as are necessary to facilitate or effect the closing for the subject property.

_____

Raymond M. Morriss, Mayor

CONTRACT OF SALE

THIS CONTRACT OF SALE ("Contract") is made by and between **Mayor and City Council of Cumberland** ("Buyer") and **Yeger Holdings LLC** ("Seller") and is effective as of the date its execution is completed as shown in the signature provisions on the last page of this Contract before the Addenda.

1. **Property Description.** Seller does agree to sell to Buyer, and Buyer does agree to purchase from Seller, all of the following tracts or parcels of land, together with the improvements thereon, and the rights, roads, ways, waters, privileges and appurtenances thereto or in anywise appertaining which are owned by Seller and are hereinafter referred to collectively as the "Property":

607 Maryland Avenue, Cumberland, MD 21502, Allegany County Land Records Book 2114, Page 283, Tax Account No. 04-038703.

2. **Purchase Price.** The purchase price for the Property (the "Purchase Price") is Twenty-Five Thousand Five Hundred Dollars ($25,000.00).

3. **Payment Terms.** The Purchase Price shall be paid at settlement.

4. **Estate.** The Property is being conveyed in fee simple.

5. **Contingencies.** This Contract and the consummation of the transaction contemplated by its terms are contingent upon the following:

A. Seller shall deliver the Property to Buyer free of tenants or inhabitants of any kind, with all of any such individuals' personal property and belongings having been removed. Seller shall be responsible for legally evicting any tenants who may have been leasing the Property.

B. Seller shall be responsible for the termination of all utility services to the Property.

C. Settlement shall be contingent upon Buyer's performance of a walk-through inspection of the Property within 48 hours prior to settlement in order to confirm that the Property will be delivered to Buyer in accordance with the terms of Sections 5 and 8 of this Contract. Buyer shall have the right to waive this contingency and proceed to settlement without conducting the said inspection.

Notwithstanding the foregoing, Buyer shall have the right to insist that Seller perform as required in subparagraphs A and B above. In that regard, Buyer shall have the right to bring an action to specifically enforce those provisions in the event they are not met within the time frame set for settlement as provided for hereinafter.

6. **Representations & Warranties.** The Property is being sold in as-is condition, without any express or implied warranties or representations made as to its condition or otherwise, and subject to all defects, if any, known or unknown.

7. **Risk of Loss.** The Property is to be held at the risk of Seller until legal title has passed or possession has been given to Buyer.

8. **Possession.** Seller agrees to give Buyer possession and occupancy of the Property at the time of settlement. Seller will deliver the Property in substantially the same physical condition as of the date of his/her/their/its execution of this Contract but free of Seller's personal property and all junk, trash and debris. Any personal property, junk, trash or debris shall be deemed to be abandoned and Buyer may dispose of it in any manner it sees fit, including, but not limited to, selling it or disposing of it as rubbish.

9. **Adjustments.** All general or special taxes, rents, ground rents, public, private or community water and/or sewer charges, including any deferred sewer and water tap fees, homeowners association charges and all other public, private or governmental charges or assessments, excluding liens which must be paid prior to deed recordation, which may exist, whether such have been levied or not, are to be adjusted and apportioned as of the date of settlement, and will be assumed and paid thereafter by Buyer.

10. **Deed and Title.** Upon payment of the Purchase Price, a deed conveying the Property from Seller to Buyer containing covenants of special warranty and further assurances shall be executed at Buyer's expense by Seller. Buyer shall prepare the deed. Title to the Property shall be good and merchantable, free of liens and encumbrances, except as specified herein and except use and occupancy restrictions of public record which are generally applicable to properties in the immediate neighborhood or the subdivision in which the Property is located and publicly recorded easements for public utilities and any other easements which may be observed by an inspection of the Property.

11. **Agency/Real Estate Commission.** Seller and Buyer warrant and represent that no real estate broker participated in the procurement or negotiation of this Contract. Each party agrees to defend, indemnify, and hold the other harmless for any claim for real estate commissions arising by reason of the indemnifying party's breach of this warranty. The provisions of this paragraph shall survive settlement and the delivery, acceptance and recordation of the deed for the Property or the termination of this Contract.

12. **Settlement.** Settlement shall occur no later than forty-five (45) days after the effective date of this Contract. Buyer's City Solicitor is authorized to consent to extensions of the date for settlement on behalf of Buyer.

13. **Notice of Disclosure or Disclaimer Statements; Lead-Based Paint.** Buyer is advised that under Maryland law (Real Property Article, Section 10-702), a purchaser is entitled to receive from a seller a written Residential Property Condition Disclosure Statement or a Written Residential Property Disclaimer Statement on forms provided by the Maryland Real Estate Commission. No such statements are provided with this Contract as, under Section 10-

702(b)(2)(vi), this transaction is exempt from that law due to the fact that the Property will be demolished.

Similarly, the disclosures relative to lead-based paint hazards under the Residential Lead-Based Paint Hazard Reduction Act of 1992, 42 U.S.C. 4852d, are inapplicable because the Property is presently unoccupied and it is not intended to be occupied for residential purposes.

14. **Documentary Stamps, Recordation, Transfer Taxes.** This transaction is exempt from recordation fees and recordation and transfer taxes.

15. **Assignability.** This Contract may not be assigned without the written consent of Seller, said consent not to be unreasonably withheld.

16. **Captions.** The marginal captions of this Contract are for convenience and in no way define or limit the intents, rights or obligations of the parties hereunder.

17. **Entire Agreement.** This Contract and any addenda thereto contain the final and entire agreement between the parties, and neither they nor their agents shall be bound by any terms, conditions, statements, warranties or representations, oral or written, not herein contained.

18. **Maryland Law Applies.** This Contract shall be governed and construed according to the laws of the State of Maryland without regard to principles of conflict of laws. It shall be enforceable exclusively by means of an action commenced in the Circuit Court for Allegany County, Maryland or the District Court of Maryland for Allegany County, and both parties waive the right to claim that such a proceeding is commenced in an inconvenient forum or one that lacks proper venue.

19. **Breach of Contract and Default.** Buyer and Seller are required and agree to make full settlement in accordance with the terms of this Contract and acknowledge that failure to do so constitutes a breach hereof. In the event of a breach, each of the parties hereto is entitled to pursue such rights and remedies as may be available, in law or in equity, including, without limitation, an action for specific performance of this Contract and/or monetary damages. If either party defaults, the party committing the default, whether Buyer or Seller, shall reimburse the non-defaulting party for the court costs, litigation expenses, and reasonable attorneys' fees that party incurred as a result of the default.

20. **Binding Effect.** This Contract shall be binding upon the parties hereto and each of their respective heirs, personal representatives, administrators, executors, successors, assigns, and guardians

21. **Gender/Tense/Conjugation.** The use of any gender, tense, or conjugation herein shall be applicable to all genders, tenses and conjugations. The use of the singular shall include the plural and the plural shall include the singular.

22. **Jury Trial Waiver. THE PARTIES HERETO WAIVE TRIAL BY JURY IN ANY ACTION OR PROCEEDING TO WHICH ANY OF THEM MAY BE PARTIES**

ARISING OUT OF OR IN ANY WAY PERTAINING TO THIS CONTRACT. IT IS AGREED AND UNDERSTOOD THAT THIS WAIVER CONSTITUTES A WAIVER OF TRIAL BY JURY OF ALL CLAIMS AGAINST ALL PARTIES TO SUCH ACTIONS OR PROCEEDINGS, INCLUDING CLAIMS AGAINST PARTIES WHO ARE NOT PARTIES TO THIS CONTRACT.

23. **Counterparts.** This Contract may be executed in one or more counterparts, each of which shall be deemed an original, but all of which taken together shall constitute one and the same instrument.

24. **Signing by Facsimile or Other Electronic Means**. Each of the parties hereto expressly authorizes and agrees to sign facsimile and/or other electronically transmitted copies or counterparts of this Contract. Once said facsimile and/or other electronically transmitted signed copies or counterparts are executed by each of the parties hereto, they shall have the same binding effect as would a signed original Contract once delivered to the other party.

25. **Addenda**. The Contract is subject to the following attached Addenda which are made a part hereof: (1) Maryland Residential Disclaimer Statement; and (2) Disclosure of Information on Lead-Based Paint and/or Lead-Based Paint Hazard.

IN WITNESS WHEREOF, the parties hereto have affixed their signatures hereto as of the date written beneath those signatures.

WITNESS:

MAYOR AND CITY COUNCIL OF CUMBERLAND

_____

By:_____
Raymond M. Morris, Mayor

_____
Date

YEGER HOLDINGS, LLC

_____

By: _____
signature

MR. YARON YEGER
printed name and title

03/21/19
Date

Regular Council Agenda
April 2, 2019

Description

Order authorizing the Engineering Department to move forward with the New Baltimore St. Town Center Project (12-16-M) incorporating design elements presented by Cochran Studio, Inc., with the contingencies that 1) final design be brought before the Mayor and Council for approval, and 2) funding acceptable to the Mayor and Council is available to complete the project as presented

Approval, Acceptance / Recommendation

☐ Budgeted

☐ 1st Reading
☐ 2nd Reading
☐ 3rd Reading

Value of Award (if applicable)

Source of Funding (if applicable)

- Order -

of the

Mayor and City Council of Cumberland

MARYLAND

ORDER NO. _____ **DATE:** _____April 2, 2019____

ORDERED, By the Mayor and City Council of Cumberland, Maryland

THAT, the Engineering Department be and is hereby authorized to move forward with the New Baltimore Street Town Center Project (12-16-M) incorporating the design elements presented by the Cochran Studio, Inc., 7192 Meadowbrooke Drive, Frederick, Maryland 21702, and recommended by the Baltimore Street Design Committee with the contingencies that 1) the final design be brought before the Mayor and Council for approval and, 2) funding acceptable to the Mayor and City Council is available to complete the project as presented.

_____

Raymond M. Morriss, Mayor

Regular Council Agenda
April 2, 2019

Description

Order authorizing the execution of Change Order No. 4 to the current contract with Leonard S. Fiore for the "Phase 1 CSO Storage Facility at WWTP" project (1-10-WWTP) for the increased amount of $21,523.46, bringing the new total contract price to $26,362,036.05, with work being contingent upon approval form the MD Department of the Environment

Approval, Acceptance / Recommendation

It is the Engineering Department's recommendation to execute Change Order No. 4 to the current contract with Leonard S. Fiore for City Project 1-10-WWTP. This Change Order is in the increased amount of $21,523.46, and pertains to costs associated with changes to Duplex Sump Pump Control panel, holes in the existing overflow chamber walls, and the replacement of a City-requested 54 inch pipeline at the overflow chamber. This Change Order also includes a credit for overtime hours for the Resident Inspector, and does not include any change in contract times. Total project time remains 802 substantial completion. This change order is contingent upon approval by Maryland Department of the Environment.

☐ Budgeted

☐ 1st Reading
☐ 2nd Reading
☐ 3rd Reading

Value of Award (if applicable)

Original Contract Price $26,416,340.00
Change Order Nos 1 to 3 ($75,827.41)
Contract Price Prior to this change order $26,340,512.59
Change Order No. 4 $21,523.46
New Contract Price Including this Change Order $26,362,036.05

Source of Funding (if applicable)

MDE Grant 87.5%
MDE Loan 12.5%

- Order -

of the

Mayor and City Council of Cumberland

MARYLAND

ORDER NO. _____ **DATE:** April 2, 2019

ORDERED, By the Mayor and City Council of Cumberland, Maryland

THAT the City Administrator be and is hereby authorized to execute Change Order No. 4 to the existing contract with Leonard S. Fiore, Inc., 5506 Sixth Avenue Rear, Altoona, PA, 16602, for City Project "Phase 1 CSO Storage Facility at WWTP" (01-10-WWTP) in the increased amount of Twenty-one Thousand, Five Hundred Twenty-three Dollars and Forty-six Cents ($21,523.46) bringing the new total contract price to Twenty-six Million, Three Hundred Sixty-two Thousand, Thirty-six Dollars and Five Cents ($26,362,036.05); and

BE IT FURTHER ORDERED that this Change Order is contingent upon approval from the Maryland Department of the Environment.

_____

Raymond M. Morriss, Mayor

Leonard S. Fiore, Inc. 01-10-WWTP	*Contract Price*
Original Contract Price	**$26,416,340.00**
Change Order No. 1	$0.00
Change Order No. 2	$16,582.53
Total Contract Price after CO 1 & 2	**$26,432,922.53**
Change Order No. 3 ***"decrease"***	($92,409.94)
Change Order No. 4	$21,523.46
New Total Contract Price to-date	**$26,362,036.05**

Funding: MDE Grant 87.5%; MDE Loan 12.5%

EJCDC
ENGINEERS JOINT CONTRACT DOCUMENTS COMMITTEE

Change Order No. 4

Date of Issuance: March 21, 2019	Effective Date: March 21, 2019
Owner: City of Cumberland, MD	Owner's Contract No.: 01-10-WWTP
Contractor: Leonard S. Fiore, Inc.	Contractor's Project No.: CT-0365
Engineer: Whitman, Requardt, and Associates, LLP	Engineer's Project No.: 13993-003
Project: Phase 1 CSO Storage Facility at the Wastewater Treatment Plant	Contract Name: Phase 1 CSO Storage Facility at the Wastewater Treatment Plant

The Contract is modified as follows upon execution of this Change Order:

Description:

1) Includes costs associated making changes to Duplex Sump Pump Control panel to provide NEMA7 enclosure as well as providing explosion proof sump pumps. See Attachment A4-1.

2) Includes costs associated with holes in the existing overflow chamber walls and pipes, which required pumping, cleaning of formwork, rebar, equipment and modifications to waterproofing and forms. See Attachment A4-2.

3) Includes City-requested 54-inch pipeline replacement at the overflow chamber due to the encountered pipeline condition. See Attachment A4-3.

4) This is a credit to the contract resulting from Resident Inspector overtime hours, as described under Specifications Section 0800, Supplemental Conditions. This credit includes overtime hours from May 12, 2018 through February 16, 2019 and includes 39 hours, charged at $95 per hour (total from May 12, 2018 to February 16, 2019 is a credit of $3,705).

Attachments: Attachments A4-1, A4-2, and A4-3

CHANGE IN CONTRACT PRICE	CHANGE IN CONTRACT TIMES *[note changes in Milestones if applicable]*
Original Contract Price: $ 26,416,340.00	Original Contract Times: Substantial Completion: 760 Ready for Final Payment: 820 days
[~~Increase~~] [Decrease] from previously approved Change Orders No. 0 to No. 3: $ (75,827.41)	[Increase] [~~Decrease~~] from previously approved Change Orders No. 0 to No. 3: Substantial Completion: 60 Ready for Final Payment: 60 days
Contract Price prior to this Change Order: $ 26,340,512.59	Contract Times prior to this Change Order: Substantial Completion: 802 Ready for Final Payment: 862 days
[Increase] [~~Decrease~~] of this Change Order: $ 21,523.46	[~~Increase~~] [~~Decrease~~] of this Change Order: Substantial Completion: not applicable Ready for Final Payment: not applicable days or dates
Contract Price incorporating this Change Order: $26,362,036.05	Contract Times with all approved Change Orders: Substantial Completion: 802 Ready for Final Payment: 862 days

RECOMMENDED:	ACCEPTED:	ACCEPTED:
By:	By:	By:
Engineer (if required)	Owner (Authorized Signature)	Contractor (Authorized Signature)
Title: ASSOCIATE	Title	Title
Date: 3/21/19	Date	Date

Approved by Funding Agency (if applicable)

By: _____ Date:

Title: _____

Leonard S. Fiore, Inc.
GENERAL CONTRACTOR
DEDICATED TO EXCELLENCE
5506 SIXTH AVENUE REAR ALTOONA, PA 16602 PH: (814) 946-3686
www.lsfiore.com Main FX: (814) 946-5288 Proj Mgmt FX: (814) 946-3526

Attachment A4-1

NO: 299

Please reference the Proj Name, Proj #, and applicable Submittal #'s, RFI#'s, etc. on all correspondence to Leonard S. Fiore, Inc.

PROJECT: Cumberland Tank (CSO Storage)

DATE: 1/29/2019

PROJ #: CT-0365

REF: Change Request - PCO-006 R: Duplex Sump Pump Controls

TO: Paul Rosol, III
Whitman, Requard & Assoc., LLP
801 South Carolina Street
Baltimore, MD 21231

WE ARE SENDING:

- ☐ Shop drawings
- ☐ Plans
- ☐ Letter
- ☐ Samples
- ☐ Prints
- ☐ Specifications
- ☐ Change Order
- ☑ Other: Change Request

SUBMITTED FOR:

- ☐ Approval
- ☐ Your use
- ☐ As Requested
- ☐ Review and Comment

SENT VIA:

- ☐ Attached
- ☑ Separate cover via: Email

ACTION TAKEN:

- ☐ Approved as Submitted
- ☐ Approved as Noted
- ☐ Returned for Corrections
- ☑ "Due Date: 2/12/2019
- ☐ Revise & Resubmit

Item	Copies	Date	No.	Description	Status
Change Request	1	1/29/19	PCO-006R	Duplex Sump Pump Controls	None

Please send all Change Order information to our new Change Management e-mail cm@lsfiore.com or to our office, attention Change Management. **** Please be advised that this is the only copy of the PCO that will be sent. We are no longer sending a hard copy. ****

Notes:

CC:

Signed: _____
Change Management (Leonard S. Fiore, Inc.)

Leonard S. Fiore, Inc.
GENERAL CONTRACTOR
DEDICATED TO EXCELLENCE

5506 6th, Avenue, Rear
Altoona, PA 16602
Ph. (814) 946-3686
Fax: (814) 946-5288

Change Request

To: Whitman, Requardt & Associates
801 South Caroline Street
Baltimore, MD 21231
Attn: Paul Rosol, III

Number: PCO-006R
Date: January 17, 2019
Job Description: Cumberland Tank

LSF Job Number: CT-0365

RE: Duplex Sump Pump Controls - Pumps

See below and attached for scope and pricing related to these changes.

Make changes to Duplex Sump Pump Control panel to provide NEMA7 enclosure as well as provide explosion proof sump pumps as per the attached RFI-19 and RFI-19-1 and associated quote from Sydnor Hydro. Submittal data is attached for the revised items.

The total amount to provide this work is **$4,517.07**

If you have any questions, please contact me at 814-946-3686

Submitted by: Chris Makdad
Project Manager

Chris Makdad

CHANGE ORDER SUMMARY

PCO-006R - Duplex Sump Pump Controls - Pumps

CONTRACTOR NAME****

Contractor/Subcontractor Name	Total (from cost breakdown)	Markup on sub (if applicable)**	Total
1. Leonard S. Fiore, Inc.	$0.00		$0.00
2. Sydnor Hydro	$5,889.00	$883.35	$6,772.35
3. Sydnor Hydro (Voluntary Credit)	($2,000.00)	($300.00)	($2,300.00)
4.			$0.00
5			$0.00
6			$0.00
7			$0.00
		Total (L/M/E/S)	$4,472.35
		Bond	$44.72
		TOTAL THIS CHANGE	**$4,517.07**

COST BREAKDOWN

CONTRACTOR NAME PRIME

Leonard S. Fiore, Inc.

LABOR COST

Classification	Certified Payroll Base Rate *	Fringe Benefits (as defined by L&I) *	Total Hourly Rate	Hours	Total
			$0.00		$0.00
			$0.00		$0.00
			$0.00		$0.00
				Sub-Total	**$0.00**

On Base Labor Rate ONLY

Social Security @	7.65%	$0.00
Medicare @	0.80%	$0.00
Unemployment @	10.89%	$0.00
Workmans Compensation @	9.63%	$0.00
Public Liability Insurance @	2.23%	$0.00
Small Tools @	2.00%	$0.00
	Sub-Total	**$0.00**

** Labor Markup (15.00%) $0.00

TOTAL LABOR **$0.00**

MATERIAL COST (attach material list if necessary, insert totals as shown)

Item	Quantity	Unit	Unit Cost	Total Cost
				$0.00
				$0.00
				$0.00
			Sub-Total	**$0.00**

**Applicable Sales Tax $0.00

** Material Markup (15.00%) $0.00

MATERIAL TOTAL **$0.00**

EQUIPMENT COST (equipment cost for owned equipment (depreciation, insurance, etc.) or documentation supporting lease of equipment)

Classification	Hour Rate		Hours	Total Cost
				$0.00
				$0.00
				$0.00
			Sub-Total	**$0.00**

** Equipment Markup (15.00%) $0.00

EQUIPMENT TOTAL **$0.00**

LME TOTAL **$0.00**

SYDNOR ...120 YEARS
HYDRO. . . INC.
2111 MAGNOLIA ST., RICHMOND, VA 23223
P.O. BOX 27186, RICHMOND, VA 23261-7186
800-552-7714 • 804-643-2725 • FAX: 804-788-9058

LEONARD S. FIORE, INC.
ATTN: CHRIS MAKDAD
5506 6TH AVE.
ALTOONA, PA 16602

PHONE: 814-946-3686
EMAIL: cmakdad@lsfiore.com

SUBJECT TO THE CONDITIONS OF SALE SET OUT BELOW AND ON THE BACK HEREOF,
Sydnor Hydro, Inc. offers to sell to Buyer the following:

REFERENCE: SUMP PUMP PACKAGE - SPEC. SECTION 15442 (SUMP PUMPS)
CSO STORAGE FACILITY WWTP - PHASE 1 - CITY OF CUBMERLAND, MARYLAND

CREDITS

We propose to offer L.S. Fiore a credit for the following equipment:

Two (2) Goulds Model 2ED Submersible Pumps ..... ($3,500.00)
One (1) Hoffman Fiberglass Enclosure ..... ($500.00)
One (1) Schneider Electric M221 PLC ..... ($750.00)

Total Credit for Above ..... *($4,750.00)*

ADDERS

Due to additional items required by the engineer/owner, we propose to offer L.S. Fiore the following equipment:

(Pump Nos. 01-SP-01, 01-SP-02) – Two (2) Liberty Model XFL51M-2 submersible explosion proof effluent pumps with 1/2 HP, 115/1/60, 3450 RPM motor rated for 14 Amps. Each pump with be furnished with dual mechanical seals and a 25' power cord. Each pump is capable of exceeding the required flow of 20 gpm @ 23.5' TDH.

Adder for Explosion Proof Rated Pumps *$4,500.00*

Control Panel - One (1) Custom Duplex Control Panel with the following features: NEMA 7 Rated Adalet Explosion Proof Enclosure with sub pan and hinges, Green 120V LED guarded pilot lights for "pump run" and "power on", Red 120V LED guarded pilot light for "general fault", 3-Position HOA selector switches, conduit entries at bottom of panel, main circuit breaker type QOU panel disconnect, 1-phase lightning arrestor, control circuit breaker with separate alarm and control fuses, elapsed time meters, pump/motor circuit breakers, pump start capacitor kits, IEC magnetic starters, alternating relay with lead selector switch, alarm dry contacts (pump 1 run, pump 2 run, pump 1 overload, pump 2 overload, leak alarm, high level), four (4) 20' mechanical float switches with external weights, intrinsically safe relays, required terminal blocks/control relays/wire duct, UL Label 698A.

Adder for Metallic Explosion Proof NEMA 7 Rated Enclosure *$5,839.00*
Adder for Intrinsically Safe Relays (Required for Explosion Proof Rating) *$300.00*

Total for Adders Above *$10,639.00*

CHANGE IN PRICING *$5,889.00*
VOLUNTARY CREDIT ..... *($2,000.00)*
**** NET ADDER* *$3,889.00***

* Changes proposed above are made based on discussions during the conference calls on 10/10/18 and 12/13/18, which require the pumps and control panel enclosure to be explosion proof rated. The need for a PLC was eliminated.

ACCEPTED UPON THE CONDITIONS SET OUT ABOVE AND OVER. EXPIRATON 30 DAYS

SYDNOR HYDRO, INC. **BUYER – LEONARD S. FIORE, INC.**

BY: _____ **BY:** _____
AUTHORIZED AGENT **AUTHORIZED AGENT – TITLE**

ACCEPTANCE COPY
(PLEASE SIGN & RETURN TO SYDNOR)

ADDITIONAL CONDITIONS OF SALE

PARTIES: Sydnor Hydro, Inc. is hereinafter referred to as "Seller". The Buyer is hereinafter referred to as "Buyer".

DURATION AND ACCEPTANCE OF QUOTATION: This quotation is an offer to sell. It may be accepted only upon the terms herein stated by Buyer signing the Acceptance copy hereof and delivering it to Seller's office before its expiration. Unless otherwise provided on the face hereof, this quotation expires thirty days after the quotation date shown on the face or at such earlier time as it may be withdrawn by Seller either verbally or by writing addressed to Buyer at the mailing address on the face hereof. Once effective, Buyer's acceptance may be canceled only with Seller's consent and upon terms which will indemnify Seller against loss by reason of such cancellation.

CLERICAL OR TYPOGRAPHICAL ERRORS in price, description, or otherwise are subject to correction by Seller.

PRICES do not include any applicable sales, use, excise or other comparable taxes which, if required to be collected or paid by Seller or its supplier, shall be paid by Buyer to Seller, unless otherwise stated on the face hereof.

TERMS OF PAYMENT: Unless otherwise stated on the face hereof, terms of payment are net thirty (30) days after invoice date. In the event customer causes shipment or work delay, the invoice date may be the date ready for shipment or installation regardless of continued possession by Seller. Seller may invoice for partial shipments. On work that includes construction services, seller reserves the right to cease construction activity and vacate the jobsite should buyer fail to make payments in accordance with payment terms established herein.

ADDITIONAL TERMS: If bankruptcy or insolvency proceedings be instituted by or against Buyer or if Buyer makes an assignment for the benefit of creditors or if Buyer's financial situation, in Seller's judgment, does not justify extending credit to Buyer, Seller may, at its election, require payment in advance or on delivery or cancel the order for any unshipped goods and require payment of any loss incurred by reason of the cancellation.

PAST DUE PRINCIPAL shall be subject to monthly interest, service or late charges at the highest lawful rate but not exceeding 1 1/2% per month. Buyer shall be liable for all costs (including reasonable attorneys' fees) incurred in collecting past due amounts.

DELIVERY: Unless stated on the face hereof, delivery shall be FOB point of shipment, and the means, method and route of delivery shall be as Seller may select. Any time of delivery stated on the face hereof is approximate only and Seller shall in no event be liable for delays in delivery or completion of work caused by delays in procuring materials or equipment or caused by fires, floods, accidents, acts of God, unavoidable accidents, strikes, labor difficulties or delay in transportation or by any action, law, ordinance, requirement, rule or regulation of any government or governmental authority, nor shall Seller be liable for any penalties or losses caused by any delay.

DESCRIPTIVE TERMS: Any descriptive terms or documents accompanying this order show only approximate dimensions, appearances, and specifications. Seller may make such changes therein as it deems an improvement.

RISK OF LOSS: The Buyer shall bear the risk of loss for any damage to or destruction of the goods ordered from such time as delivery by Seller of the goods to the carrier for transportation to Buyer, or, if Seller is the carrier, from tender of delivery to Buyer by Seller.

ADDITIONAL SERVICES: Unless stated on the face hereof, Seller does not agree or undertake to supervise or in any manner assist in the installation or start-up or servicing of the goods ordered.

EXPRESS WARRANTIES: (a) Items of equipment furnished by Seller under this Agreement, whether drop-shipped or installed by Seller, may be conditionally warranted against defects in material and workmanship by their manufacturer and are not warranted against such defects by Seller. Buyer's sole and exclusive remedy (if any) is against manufacturer only.

(b) Except as provided in paragraph (a), Seller agrees to correct all new construction work performed by Seller under this Agreement which proves to be defective in material or workmanship within one year from the Date of Substantial Completion. New construction work is defined as work performed on new facilities.

(c) Except as provided in paragraph (a), Seller agrees to correct service work provided by Seller under this Agreement which proves to be defective in material or workmanship within ninety days from the date service work is completed. This warranty is expressly limited to defects in material and workmanship specifically provided by Seller, and does not include failure caused by conditions outside the scope of service work performed by Seller. Service work is defined as work performed primarily on existing facilities, even if some portion of the work includes new or replacement components.

This warranty is expressly in lieu of all other rights and remedies at law or in equity. THERE ARE NO EXPRESS WARRANTIES EXCEPT THOSE HEREINABOVE SET OUT IN THIS PARAGRAPH. Seller shall not be responsible for any work done or expense incurred by Buyer which has not been authorized or is in excess of that authorized.

DISCLAIMER OF IMPLIED WARRANTIES AND CONSEQUENTIAL DAMAGES: SELLER DOES NOT WARRANT THE MERCHANTABILITY OR FITNESS FOR ANY PARTICULAR OR INTENDED PURPOSE OR USE. SELLER SHALL NOT BE LIABLE FOR INCIDENTAL, CONSEQUENTIAL OR LIQUIDATED DAMAGES.

CONDITIONS EXCLUSIVE: No terms or conditions (including terms and conditions in any specification, order, contract, or subcontract in performance of which Buyer is purchasing the articles or services to be furnished pursuant hereof) not stated herein, and no agreement or other understanding varying the terms and conditions herein stated, shall be binding on Seller unless made a part hereof and signed by a duly authorized representative of Seller. To the extent that the assumptions, representations or conditions contained in this proposal are in conflict with any terms and conditions set forth on any subsequent purchase order or similar document issued to authorize or accept this proposal, the assumptions, representations and conditions of this proposal shall govern.

PROJECT:

CSO Storage Facility WWTP - Phase 1
City of Cumberland, MD

ENGINEER:

Whitman, Requardt & Associates, LLP
801 South Caroline Street
Baltimore, MD 21231

CONTRACTOR:

Leonard S. Fiore, Inc.
5506 6th Ave.
Altoona, PA 16602

SECTION 15442 - SUMP PUMPS
EQUIPMENT SUPPLIER

Sydnor Hydro, Inc.
2111 Magnolia Street
Richmond, VA 23223
Phone: (804) 643-2725

Table of Contents

Page 1: Cover Sheet
Page 2: Table of Contents

Duplex Sump Pump Package (01-SP-01, 01-SP-02)
Storage Tank, Access Corridor

Pages 3-11: Liberty Explosion Proof Sump Pumps
Pages 12-38: Duplex Control Panel (Explosion Proof Rated with NEMA 7 Enclosure)

Simplex Sump Pump Package (02-SP-03, 02-SP-04)
Pump Station, Trench
Pump Station, Valve Vault

Pages 39-40: Zoeller Sump Pumps

Quantity of Two (2) Liberty Model XFL51M-2 Submersible Explosion-Proof Sumps Pumps
01-SP-01, 01-SP-2: Storage Tank, Access Corridor

Liberty Pumps®

X-Series™

XFL50-Series

1/2 hp

XFL70-Series

3/4 hp

POWDER COATED TOUGH™

3 Year Warranty

Patent: See www.libertypumps.com/patents

Explosion-proof Submersible Effluent Pumps for Hazardous Locations

Class 1, Division 1 Groups C & D

Class 1, Zone 1 and Group IIA and IIB

Features:

- Dual 1-1/2" or 2" discharge
- 3/4" solids-handling
- Heavy cast iron construction
- Dual shaft seals
- Seal fail sensor
- Semi-open cast iron impeller (bronze optional)
- 416 stainless steel rotor shaft
- 1-1/2" threads provided at power cords for optional conduit connection

Dual Sized Discharge

1-1/2" or 2"

For use with ISS-Series and ISD-Series intrinsically safe panels.

Consult factory for proper panel sizing.

innovate. evolve.

XFL50-SERIES XFL70-SERIES

1/2 hp *3/4 hp*

TECHNICAL SPECIFICATIONS

MODELS	HP	VOLTS	HZ	PHASE	FULL LOAD AMPS	CAPACITOR KIT	DISCHARGE SIZE	CORD LENGTH	WEIGHT (Lbs.)
XFL51M-2	1/2	115	60	1	14	K001515	1-1/2" & 2"	25'	89
XFL52M-2	1/2	208/230	60	1	7	K001514	1-1/2" & 2"	25'	89
XFL53M-2	1/2	208/230	60	3	4.5	N/A	1-1/2" & 2"	25'	89
XFL54M-2	1/2	440-480	60	3	2.6	N/A	1-1/2" & 2"	25'	89
XFL55M-2	1/2	575	60	3	2.2	N/A	1-1/2" & 2"	25'	89
XFL71M-2	3/4	115	60	1	15	K001515	1-1/2" & 2"	25'	89
XFL72M-2	3/4	208/230	60	1	9	K001514	1-1/2" & 2"	25'	89
XFL73M-2	3/4	208/230	60	3	6	N/A	1-1/2" & 2"	25'	89
XFL74M-2	3/4	440-480	60	3	3	N/A	1-1/2" & 2"	25'	89
XFL75M-2	3/4	575	60	3	2.5	N/A	1-1/2" & 2"	25'	89

25' cords are standard. For 35' or 50' cords, add "-3" or "-5" suffix respectively. Example: XFL52M-5
Cast iron impeller standard. For bronze impeller add "B" to model number. Example: XFL51BM-2
NOTE: 3-phase models require a control panel with overloads properly sized for the pump. See intrinsically safe panels ISS-Series (simplex) or ISD-Series (duplex) literature for complete panel information. Consult factory for proper panel sizing.

DIMENSIONAL DATA:

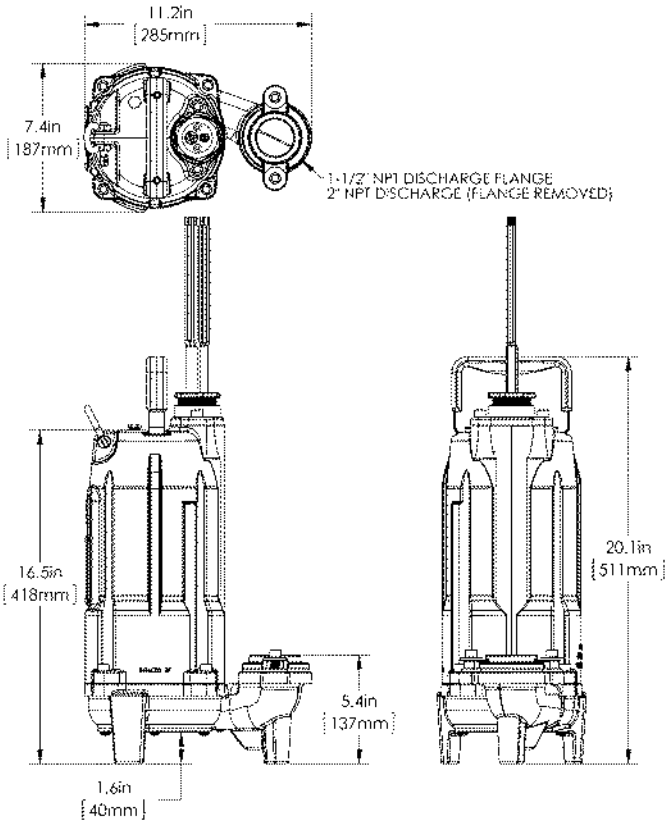

Meets FM Standards

Specifications are subject to change without notice.

CONSTRUCTION:

Pump and Motor Housing: Heavy cast iron - Class 30

Impeller: Cast Iron (standard), Bronze option available (order "B" models)

Motor: Submersible type, oil-filled, hermetically sealed

Bearings: Ball bearings upper and lower

Thermal Protection: Single-phase models - built into motor windings with automatic reset. Three-phase models require overloads in the control panel

Capacitor: External run capacitor required in panel (single phase models)

Shaft Seal: Dual seals, silicon carbide with BUNA N elastomers and stainless steel housing

Seal Fail Sensor: Integral moisture sensing probe (functionality requires indicator in panel – see ISS or ISD-Series panels)

Maximum Fluid Temperature: 104° F (40° C)

PERFORMANCE CURVE

60Hz. 3450 RPM

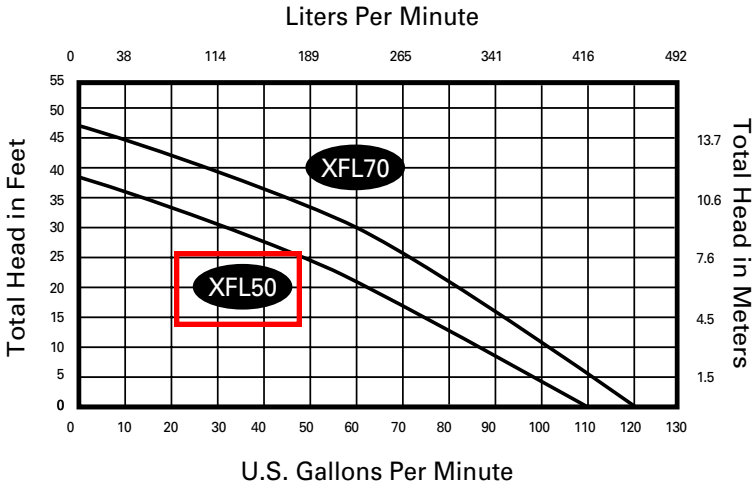

Liberty Pumps • 7000 Apple Tree Avenue • Bergen, New York 14416 • Phone 800-543-2550 Fax (585) 494-1839
www.libertypumps.com

Copyright © Liberty Pumps, Inc. 2017
All rights reserved. LLIT 6736 R03/17

Pump Specifications

XFL50 Series
½ HP Submersible Effluent Pump
For Hazardous Locations
Class 1, Division 1 Groups C & D
Class 1, Zone 1 and Groups IIA & IIB

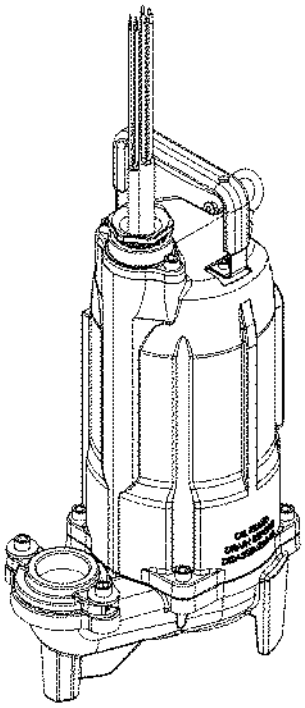

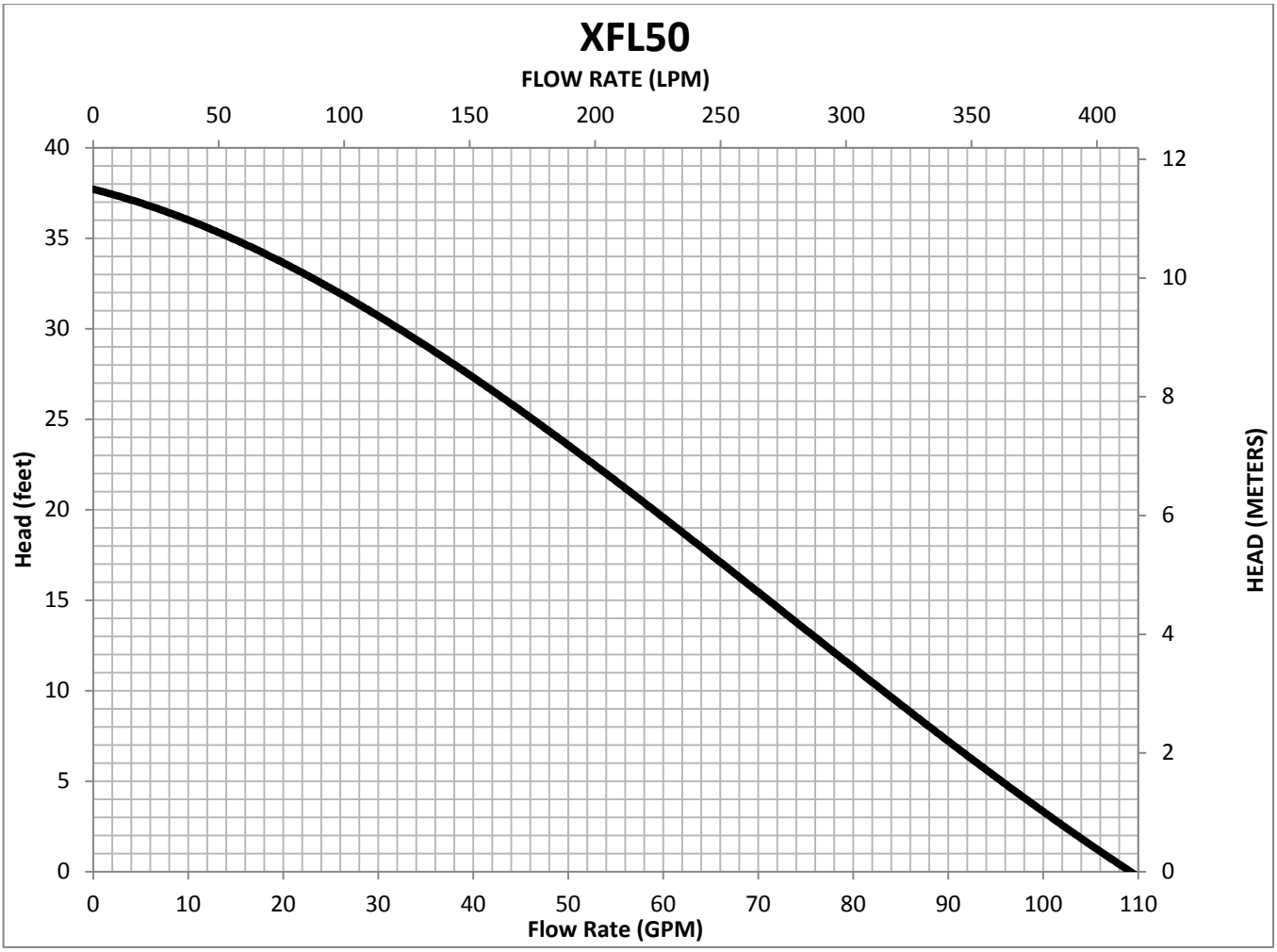

©Copyright 2016 Liberty Pumps Inc. All rights reserved. Specifications subject to change without notice.

XFL50-Series Dimensional Data

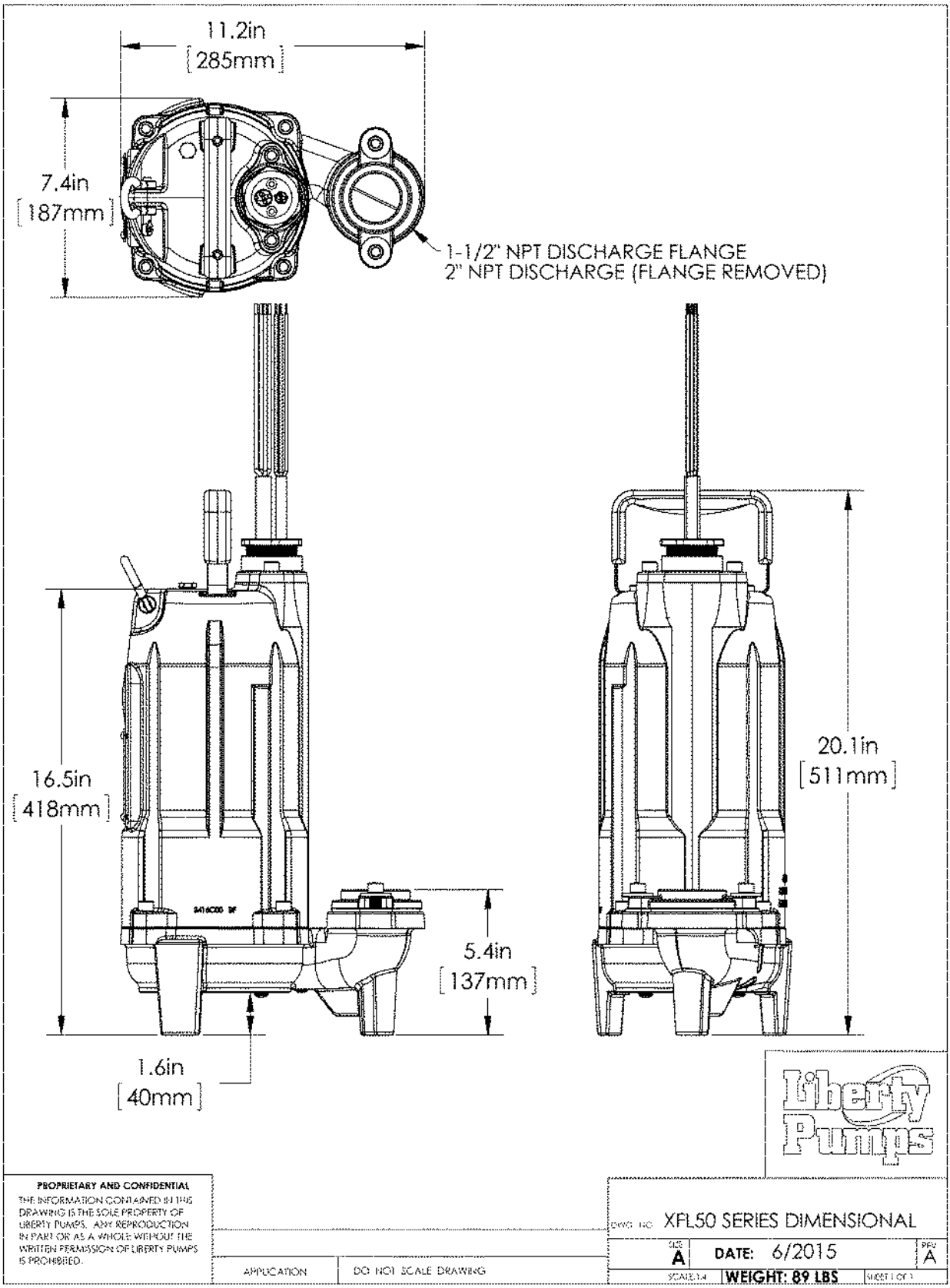

©Copyright 2016 Liberty Pumps Inc. All rights reserved. Specifications subject to change without notice.

XFL50 -Series Electrical Data

MODEL	HP	IMPELLER	VOLTAGE	PHASE	FULL LOAD AMPS	LOCKED ROTOR AMPS	THERMAL OVERLOAD TEMP	STATOR WINDING CLASS	CORD LENGTH (FT)	DISCHARGE NPT
XFL51M-2	1/2	CAST IRON	115	1	14	66	120˚C/248˚F	F	25	1-1/2" & 2"
XFL51M-3	1/2	CAST IRON	115	1	14	66	120˚C/248˚F	F	35	1-1/2" & 2"
XFL51M-5	1/2	CAST IRON	115	1	14	66	120˚C/248˚F	F	50	1-1/2" & 2"
XFL52M-2	1/2	CAST IRON	208/230	1	7	33.6	105˚C/221˚F	F	25	1-1/2" & 2"
XFL52M-3	1/2	CAST IRON	208/230	1	7	33.6	105˚C/221˚F	F	35	1-1/2" & 2"
XFL52M-5	1/2	CAST IRON	208/230	1	7	33.6	105˚C/221˚F	F	50	1-1/2" & 2"
XFL53M-2	1/2	CAST IRON	208/230	3	4.5	33.5	105˚C/221˚F	F	25	1-1/2" & 2"
XFL53M-3	1/2	CAST IRON	208/230	3	4.5	33.5	105˚C/221˚F	F	35	1-1/2" & 2"
XFL53M-5	1/2	CAST IRON	208/230	3	4.5	33.5	105˚C/221˚F	F	50	1-1/2" & 2"
XFL54M-2	1/2	CAST IRON	440-480	3	2.6	33.5	105˚C/221˚F	F	25	1-1/2" & 2"
XFL54M-3	1/2	CAST IRON	440-480	3	2.6	33.5	105˚C/221˚F	F	35	1-1/2" & 2"
XFL54M-5	1/2	CAST IRON	440-480	3	2.6	33.5	105˚C/221˚F	F	50	1-1/2" & 2"
XFL55M-2	1/2	CAST IRON	575	3	2.2	12.8	105˚C/221˚F	F	25	1-1/2" & 2"
XFL55M-3	1/2	CAST IRON	575	3	2.2	12.8	105˚C/221˚F	F	35	1-1/2" & 2"
XFL55M-5	1/2	CAST IRON	575	3	2.2	12.8	105˚C/221˚F	F	50	1-1/2" & 2"
XFL51BM-2	1/2	BRONZE	115	1	14	66	120˚C/248˚F	F	25	1-1/2" & 2"
XFL51BM-3	1/2	BRONZE	115	1	14	66	120˚C/248˚F	F	35	1-1/2" & 2"
XFL51BM-5	1/2	BRONZE	115	1	14	66	120˚C/248˚F	F	50	1-1/2" & 2"
XFL52BM-2	1/2	BRONZE	208/230	1	7	33.6	105˚C/221˚F	F	25	1-1/2" & 2"
XFL52BM-3	1/2	BRONZE	208/230	1	7	33.6	105˚C/221˚F	F	35	1-1/2" & 2"
XFL52BM-5	1/2	BRONZE	208/230	1	7	33.6	105˚C/221˚F	F	50	1-1/2" & 2"
XFL53BM-2	1/2	BRONZE	208/230	3	4.5	33.5	105˚C/221˚F	F	25	1-1/2" & 2"
XFL53BM-3	1/2	BRONZE	208/230	3	4.5	33.5	105˚C/221˚F	F	35	1-1/2" & 2"
XFL53BM-5	1/2	BRONZE	208/230	3	4.5	33.5	105˚C/221˚F	F	50	1-1/2" & 2"
XFL54BM-2	1/2	BRONZE	440-480	3	2.6	33.5	105˚C/221˚F	F	25	1-1/2" & 2"
XFL54BM-3	1/2	BRONZE	440-480	3	2.6	33.5	105˚C/221˚F	F	35	1-1/2" & 2"
XFL54BM-5	1/2	BRONZE	440-480	3	2.6	33.5	105˚C/221˚F	F	50	1-1/2" & 2"
XFL55BM-2	1/2	BRONZE	575	3	2.2	12.8	105˚C/221˚F	F	25	1-1/2" & 2"
XFL55BM-3	1/2	BRONZE	575	3	2.2	12.8	105˚C/221˚F	F	35	1-1/2" & 2"
XFL55BM-5	1/2	BRONZE	575	3	2.2	12.8	105˚C/221˚F	F	50	1-1/2" & 2"

LIBERTY PUMPS CONTROL INFORMATION

PUMP MODELs	CAPACITOR	SIMPLEX PANEL	DUPLEX PANEL	CAP KIT
XFL51	50uf	ISS24LC1=3-5	ISD24LC2=3-5	K001515
XFL52	45uf	ISS24LC1=3-5	ISD24LC2=3-5	K001514
XFL53	N/A	ISS34=3-171-5	ISD34=3-171-5	N/A
XFL54	N/A	ISS34=3-141-5	ISD34=3-141-5	N/A
XFL55	N/A	ISS54=3-121-5	ISD54=3-121-5	N/A

Note: Liberty Pumps ISS and ISD Series control panels include intrinsically safe float circuits for use with pumps in hazardous locations

©Copyright 2016 Liberty Pumps Inc. All rights reserved. Specifications subject to change without notice.

XFL50 - Series Technical Data

IMPELLER	7 VANE CLASS 25 CAST IRON OR BRONZE
SOLIDS HANDLING SIZE	3/4”
PAINT	POWDER COAT
MAX LIQUID TEMP	40˚C 104˚F
MAX STATOR TEMP	130˚C 266˚F
THERMAL OVERLOAD	105˚C 221˚F
POWER CORD TYPE	SOOW
MOTOR HOUSING	CLASS 30 CAST IRON
VOLUTE	CLASS 30 CAST IRON
SHAFT	STAINLESS
HARDWARE	STAINLESS
O RINGS	BUNA - N
MECHANICAL SEAL UPPER	UNITIZED - SILICON CARBIDE / SILICON CARBIDE
MECHANICAL SEAL LOWER	2 PIECE – SILICON CARBIDE / SILICON CARBIDE
MIN BEARING LIFE	50,000 HRS
WEIGHT	89 LBS

XFL50 - Series Specifications

1.01 GENERAL:

The contractor shall provide labor, material, equipment, and incidentals required to provide___**2**___(QTY) centrifugal pumps as specified herein. The pump models covered in this specification are Series XFL50 single phase or three phase pumps. The pump furnished for this application shall be model __**XFL51M-2**__as manufactured by Liberty pumps.

2.01 OPERATING CONDITIONS:

Each submersible pump shall be rated at **1/2** hp_**115**_volts __**1**____ phase 60 Hz. 3450 RPM. The unit shall produce_**20**___G.P.M. at _**23.5**_ feet of total dynamic head.

The submersible pump shall be capable of handling residential effluent with 3/4” solid handling capability. The submersible pump shall have The following hydraulic performance:

XFL50: a shut-off head of 38 feet and a maximum flow of 96 GPM @ 5 feet of total dynamic head.

*Note: Control panels must include intrinsically safe float circuits when pumps are installed in hazardous locations.

©Copyright 2016 Liberty Pumps Inc. All rights reserved. Specifications subject to change without notice.

3.01 CONSTRUCTION:

Each centrifugal effluent pump shall be equal to the C US certified XFL50 Series pumps manufactured by Liberty Pumps, Bergen NY. The castings shall be constructed of class 30 cast iron. The motor housing shall be oil filled to dissipate heat. Air filled motors shall not be considered equal since they do not properly dissipate heat from the motor. All mating parts shall be machined and sealed with Buna-N O-rings. All fasteners exposed to the liquid shall be stainless steel. The upper and lower bearing of the motor shall be capable of handling all radial and thrust loads. The pump is protected with a duel seal configuration with an oil cavity between the two seals. A leak sensor is housed in this chamber to detect the presence of water and will activate an alarm at the control panel indicating service is required. Both seals are silicon carbide / silicon carbide with stainless steel housings and spring, however the lower seal is of a two piece design to facilitate service.

4.01 ELECTRICAL POWER CORD

The submersible pump shall be supplied with 25, 35, or 50 feet of a multi-conductor cord of type SOOW The power cord shall be sized for the rated full load amps of the pump in accordance with the National Electric Code. A separate control cord SOOW of equal length will also exit the pump. Both cords are located within a casting configured for 1-1/2" conduit if the application requires. The cords are secured with a rubber seal ring and potted – the individual strands are exposed to the epoxy to prevent any wicking through the conductors.

5.01 MOTORS

Single phase motors shall be oil filled, permanent split capacitor, class F insulated, NEMA B design, rated for continuous duty. Three phase motors shall be oil filled, class F insulated NEMA B design, rated for continuous duty. At maximum load the winding temperature shall not exceed 130 degrees C unsubmerged. Since air filled motors are not capable of dissipating heat they shall not be considered equal. Single phase pump motors shall have an integral thermal / current overload switch in the windings for protecting the motor. A capacitor is required and shall be mounted in the control panel. Three phase motors shall have a thermal overload device mounted on the windings which is connected to a motor control relay located in the control panel.

6.01 BEARINGS AND SHAFT

Upper and lower ball bearings shall be required. The bearings shall be a single ball / race type bearing. Both bearings shall be permanently lubricated by the oil which fills the motor housing. The motor shaft shall be made of 300 series stainless steel and have a minimum diameter of .625".

7.01 SEALS

The pump shall have two shaft seals with an oil chamber between them. A leak detection probe is positioned in the oil chamber and continuously monitors for water that would indicate the lower seal has failed. The lower seal is a two piece design and can be serviced in the field. The upper is a unitized design, both seals are silicon carbide / silicon carbide seal faces with stainless steel housings and spring. All other seals are of an O-ring design of Buna –N material.

8.01 IMPELLER

The impeller shall be a class 25 cast iron or bronze, with pump out vanes on the back shroud to keep debris away from the seal area. It shall be threaded onto the motor shaft.

9.01 CONTROLS

All the XFL50 series pumps require a control panel. Single phase units utilize a Permanent Split Capacitor, PSC, type motor and require a specific run capacitor. Three phase motor are equipped with a thermal overload that must be connected in the control panel to protect against overheating. Control panels must include intrinsically safe float circuits when pumps are installed in hazardous locations.

©Copyright 2016 Liberty Pumps Inc. All rights reserved. Specifications subject to change without notice.

10.01 PAINT

The exterior of the casting shall be protected with Powder Coat paint.

11.01 SUPPORT

The pump shall have cast iron support legs, enabling it to be a free standing unit. The legs will be high enough to allow 3/4” solids to enter the volute.

12.01 SERVICEABILITY

Components required for the repair of the pump shall be shipped within a period of 24 hours.

14.01 TESTING

The pump shall have a ground continuity check and the motor chamber shall be Hi-potted to test for electrical integrity, moisture content and insulation defects. The motor and volute housing shall be pressurized, and an air leak decay test is performed to ensure integrity of the motor enclosure. The pump shall be run, voltage and current monitored, and evaluated for noise or other malfunction.

15.01 QUALITY CONTROL

The pump shall be manufactured in an ISO 9001 certified Facility.

16.01 WARRANTY

Standard limited warranty shall be 3 years.

©Copyright 2016 Liberty Pumps Inc. All rights reserved. Specifications subject to change without notice.

3. 3 Year Limited Warranty

*__NOTE:__ Liberty Pumps, Inc. assumes no responsibility for damage or injury due to disassembly in the field. Disassembly, other than at Liberty Pumps or its authorized service centers, automatically voids warranty.

Liberty Pumps, Inc. warrants that pumps of its manufacture are free from all factory defects in material and workmanship for a period of 3 years from the date of purchase. The date of purchase shall be determined by a dated sales receipt noting the model and serial number of the pump. The dated sales receipt must accompany the returned pump if the date of return is more than 3 years from the "CODE" (date of manufacture) number noted on the pump nameplate.

The manufacturer's obligation under this Warranty shall be limited to the repair or replacement of any parts found by the manufacturer to be defective, provided the part or assembly is returned freight prepaid to the manufacturer or its authorized service center, and provided that none of the following warranty-voiding characteristics are evident.

The manufacturer shall not be liable under this Warranty if the product has not been properly installed; if it has been disassembled, modified, abused or tampered with; if the electrical cord has been cut, damaged or spliced; if the pump discharge has been reduced in size; if the pump has been used in water temperatures above the advertised rating, or water containing sand, lime, cement, gravel or other abrasives; if the product has been used to pump chemicals or hydrocarbons; if a non-submersible motor has been subjected to excessive moisture; or if the label bearing the serial, model and code number has been removed. Liberty Pumps, Inc. shall not be liable for any loss, damage or expenses resulting from installation or use of its products, or for consequential damages, including costs of removal, reinstallation or transportation.

There is no other express warranty. All implied warranties, including those of merchantability and fitness for a particular purpose, are limited to three years from the date of purchase.

This Warranty contains the exclusive remedy of the purchaser, and, where permitted, liability for consequential or incidental damages under any and all warranties are excluded.

Liberty Pumps®

7000 Apple Tree Avenue
Bergen, NY 14416
Phone: (800) 543-2550
Fax: (585) 494-1839
www.libertypumps.com

©Copyright 2015 Liberty Pumps Inc. All rights reserved

Alderon Industries Submittal

Date: 11/6/2018

Job: City of Cumberland

Model: A2004750

Electrical: 120/1/60, .33HP, 10.7FLA, 60HZ

UL 508 Industrial Controls
UL 698A Intrinsically Safe Controls

ALDERON™ Industries
Leading Edge Control Products

Submittal Information

PO Box 827 Hawley MN, 56549 Phone 218-483-3034
Fax 218-483-3036 www.alderonind.com

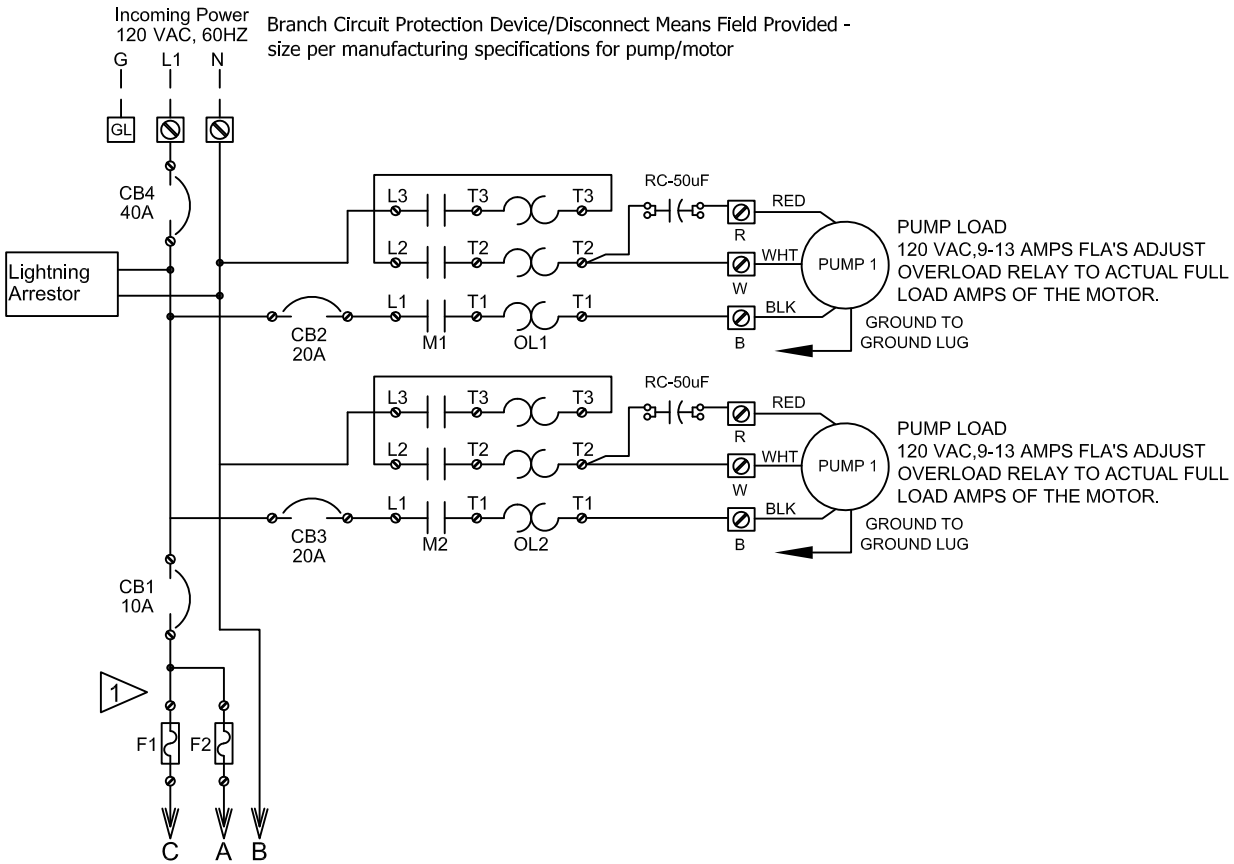

1 F1 & F2 FUSE MUST BE REPLACED WITH 3 AMP TYPE 5mmX20mm FAST ACTING 250 V MAX.

- - - FIELD WIRING
..... FIELD SUPPLIED
TERMINAL BLOCK TB

Power Wiring = BLK
120VAC Control Wiring = RED
Neutral = WHT
Ground = GRN

AWG/ OR CIRCULAR MILL SIZE	TIGHTENING TORQUE IN INCH POUNDS	
	SCREW DRIVER	EXTERNAL DRIVE WRENCH
14	35	75
12	35	75
10	35	75
8	40	75
6	45	110
4	45	110
2	50	150
1	50	150
1/0	50	180
2/0	50	180

LEGEND	
CR	CONTROL RELAY
GL	GROUND LUG
MCB	MAIN CIRCUIT BREAKER
CB	CIRCUIT BREAKER
M1,2	MOTOR CONTACTOR
OL1,2	OVERLOAD RELAY

ALDERON Industries
Leading Edge Control Products
110 15TH ST. SOUTH
HAWLEY MN, 56549
PH: 218-483-3034 WWW.ALDERONIND.COM

Page Notes: ---

Ident. Number:	EWS-1858
Part Number:	EWS-1858
Quote Number:	A2004750
Drawn By:	Austin Vandeberg
Checked By:	----
Date:	11/6/2018
Revision Level:	AAA

Sheet Description: ----

Sheet No: 1 Of 3

Notes:
1. WARNING! Electrical Shock Hazard! Disconnect power before servicing this product. A qualified service person must install and service this product according to applicable electrical and plumbing codes.
2. Install in accordance with National Electric Code, NFPA 70, Seal all boxes, fittings and conduit with appropriate seal devices to prevent moisture and gases from entering enclosure.
3. Connect all grounds to a good ground. 4. Dashed lines represent field wiring - Use *minimum* 60 deg C Copper Wire 5. Branch Circuit Protection Device/Disconnect Means Field Provided.

07-29-2013 Version; Rev AAD, MECH-00000056

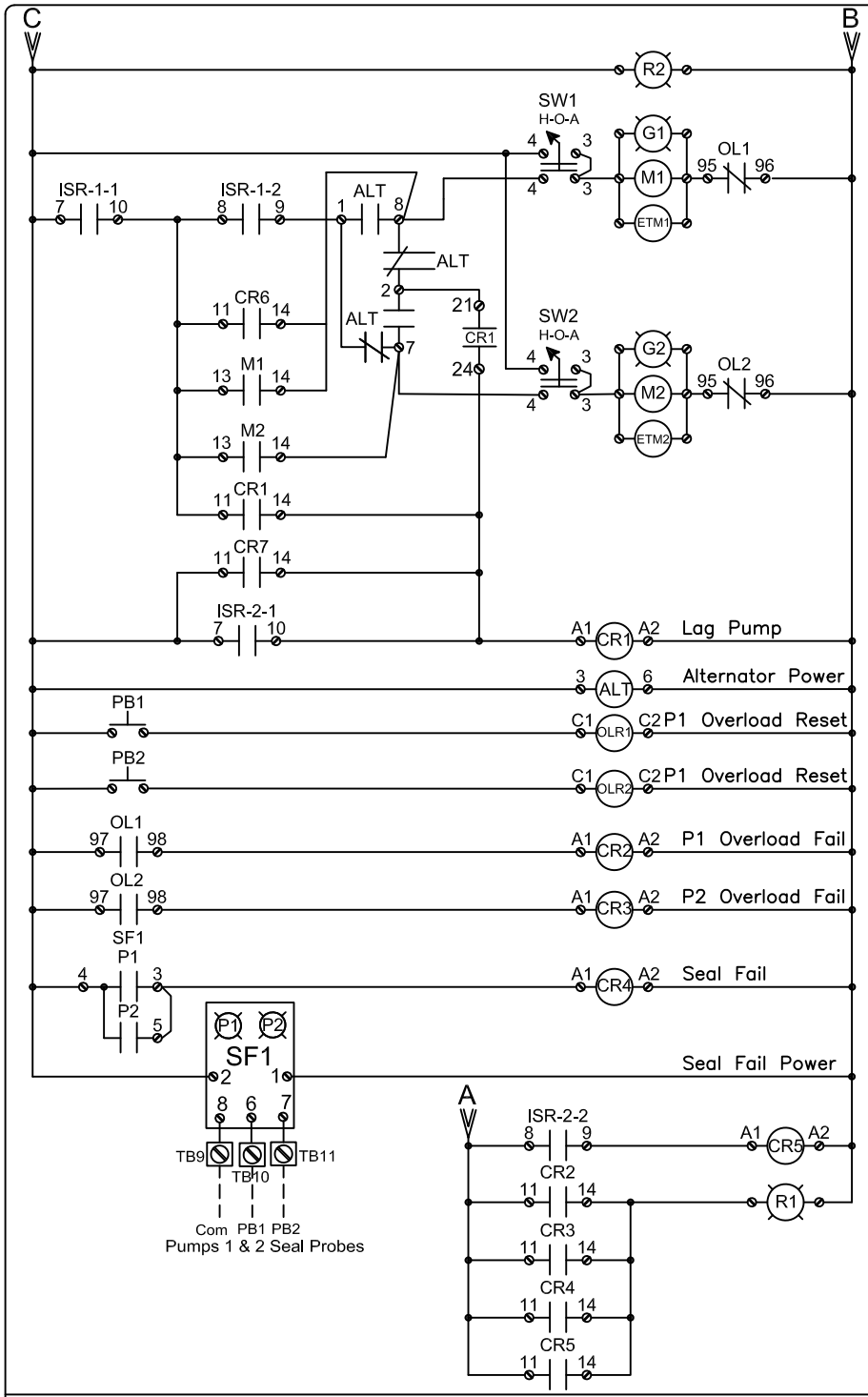

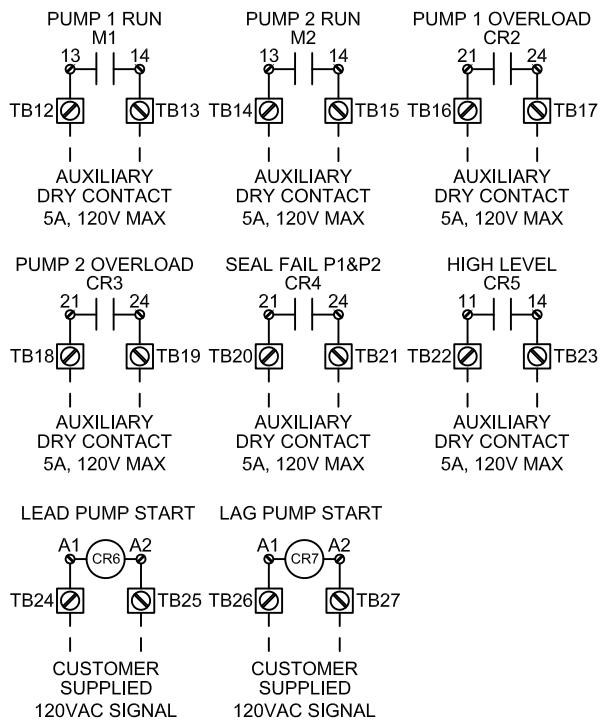

- - - FIELD WIRING

····· FIELD SUPPLIED

TERMINAL BLOCK
TB

Power Wiring = BLK
120VAC Control Wiring = RED
Neutral = WHT
Ground = GRN

AWG/ OR CIRCULAR MILL SIZE	TIGHTENING TORQUE IN INCH POUNDS	
	SCREW DRIVER	EXTERNAL DRIVE WRENCH
14	35	75
12	35	75
10	35	75
8	40	75
6	45	110
4	45	110
2	50	150
1	50	150
1/0	50	180
2/0	50	180

LEGEND

CR	CONTROL RELAY
GL	GROUND LUG
M1,2	MOTOR CONTACTOR
OL1,2	OVERLOAD RELAY
SW1,2	HAND OFF AUTO SWITCH
ETM1, 2	ELAPSED TIME METER
ALT	ALTERNATING RELAY
G1,2	PUMP RUN INDICATOR
R2	POWER ON INDICATOR
R1	GENERAL FAULT INDICATOR
SF1	SEAL FAIL RELAY
PB1,2	PUSHBUTTON OVERLOAD RESET

ALDERON Industries
Leading Edge Control Products
110 15TH ST. SOUTH
HAWLEY MN, 56549
PH: 218-483-3034 WWW.ALDERONIND.COM

Page Notes: ---

Ident. Number:	EWS-1858
Part Number:	EWS-1858
Quote Number:	A2004750
Drawn By:	Austin Vandeberg
Checked By:	----
Date:	11/6/2018
Revision Level:	AAA

Sheet Description:

Sheet No:

2 3

Of

Notes:
1. WARNING! Electrical Shock Hazard! Disconnect power before servicing this product. A qualified service person must install and service this product according to applicable electrical and plumbing codes.
2. Install in accordance with National Electric Code, NFPA 70, Seal all boxes, fittings and conduit with appropriate seal devices to prevent moisture and gases from entering enclosure.
3. Connect all grounds to a good ground. 4. Dashed lines represent field wiring - Use *minimum* 60 deg C Copper Wire 5. Branch Circuit Protection Device/Disconnect Means Field Provided.

07-29-2013 Version; Rev AAD, MECH-00000056

Install in accordance with Art. 504 of the National Electrical Code.

For connecting only to purely resistive non-energy storing devices.

Non-Hazardous Area

Hazardous Area Class 1,2 Groups A,B,C and D Max. cable length allowed is 300' Contact Factory for other lengths

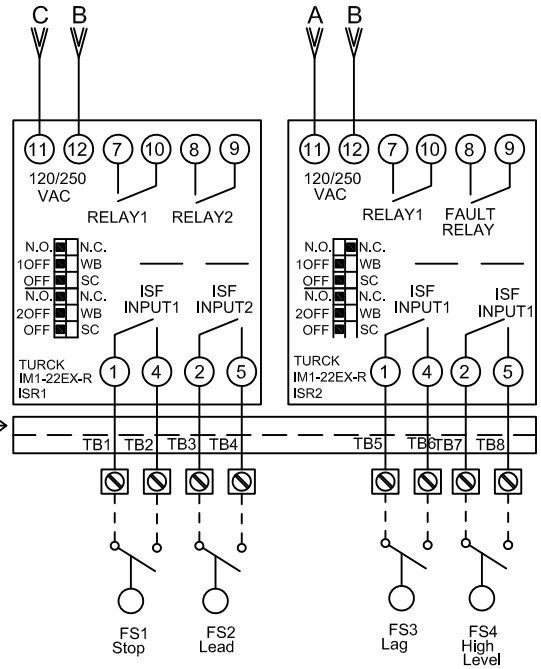

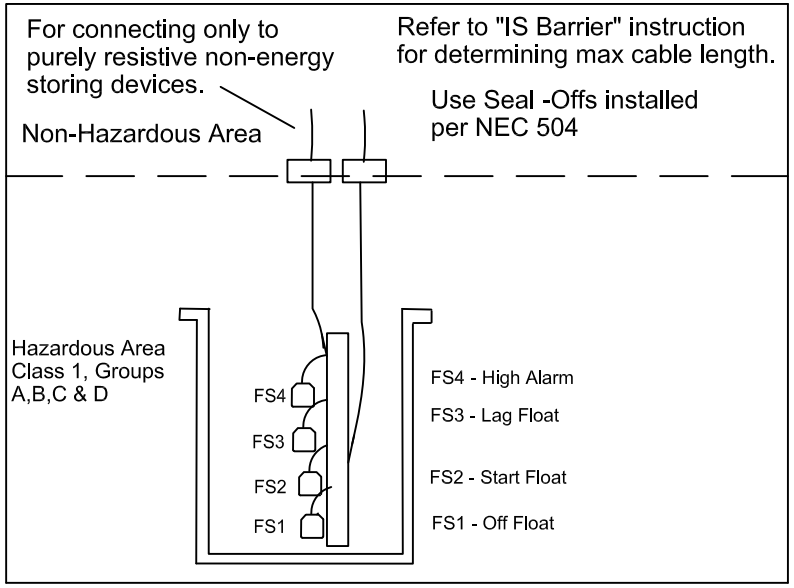

--- FIELD WIRING

····· FIELD SUPPLIED

TB TERMINAL BLOCK

Power Wiring = BLK

120VAC Control Wiring = RED

Neutral = WHT

Ground = GRN

AWG/ OR CIRCULAR MILL SIZE	TIGHTENING TORQUE IN INCH POUNDS	
	SCREW DRIVER	EXTERNAL DRIVE WRENCH
14	35	75
12	35	75
10	35	75
8	40	75
6	45	110
4	45	110
2	50	150
1	50	150
1/0	50	180
2/0	50	180

LEGEND	
CR	CONTROL RELAY
GL	GROUND LUG
M1,2	MOTOR CONTACTOR
OL1,2	OVERLOAD RELAY
SW1,2	HAND OFF AUTO SWITCH
ETM1, 2	ELAPSED TIME METER
ALT	ALTERNATING RELAY
TD1	TIME DELAY RELAY
G1,2	PUMP RUN INDICATOR
G3	POWER ON INDICATOR
SF1	SEAL FAIL RELAY
R1,2	SEAL FAIL INDICATOR
R3,4	THERMAL FAIL INDICATOR
B	ALARM BUZZER
SW3	TEST/SILENCE SWITCH

ALDERON Industries
Leading Edge Control Products
110 15TH ST. SOUTH
HAWLEY MN, 56549
PH: 218-483-3034 WWW.ALDERONIND.COM

Page Notes: ---

Ident. Number:	EWS-1858
Part Number:	EWS-1858
Quote Number:	A2004750
Drawn By:	Austin Vandeberg
Checked By:	----
Date:	11/6/2018
Revision Level:	AAA

Sheet Description: ----

Sheet No: 3 Of 3

Notes:
1. WARNING! Electrical Shock Hazard! Disconnect power before servicing this product. A qualified service person must install and service this product according to applicable electrical and plumbing codes.
2. Install in accordance with National Electric Code, NFPA 70, Seal all boxes, fittings and conduit with appropriate seal devices to prevent moisture and gases from entering enclosure.
3. Connect all grounds to a good ground. 4. Dashed lines represent field wiring - Use *minimum* 60 deg C Copper Wire 5. Branch Circuit Protection Device/Disconnect Means Field Provided.

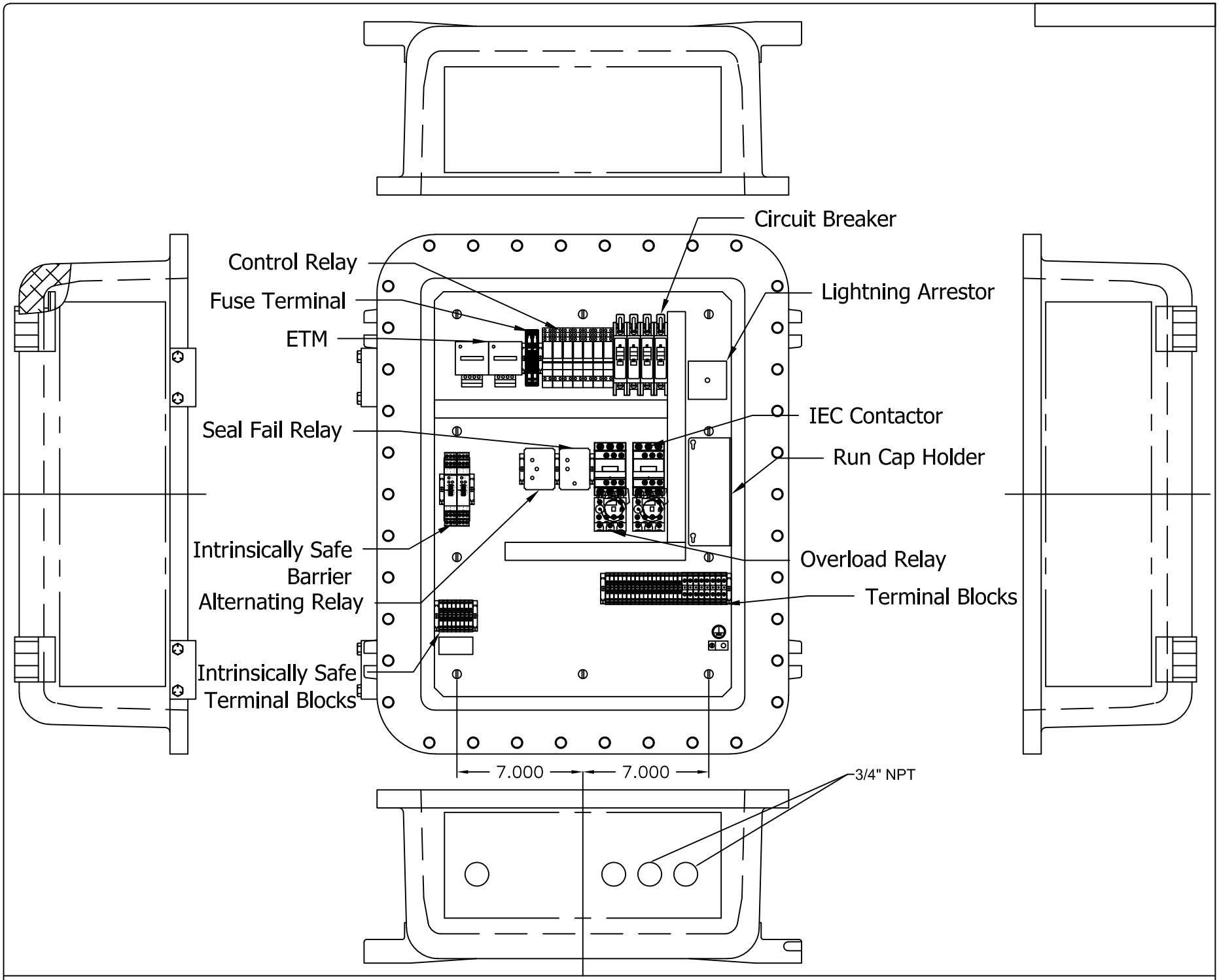

Notes:
1. WARNING! Electrical Shock Hazard! Disconnect power before servicing this product. A qualified service person must install and service this product according to applicable electrical and plumbing codes.
2. Install in accordance with National Electric Code, NFPA 70, Seal all boxes, fittings and conduit with appropriate seal devices to prevent moisture and gases from entering enclosure.
3. Connect all grounds to a good ground. 4. Dashed lines represent field wiring - Use *minimum* 60 deg C Copper Wire 5. Branch Circuit Protection Device/Disconnect Means Field Provided.

ALDERON Industries
Leading Edge Control Products
110 15TH ST. SOUTH
HAWLEY MN, 56549
PH: 218-483-3034 WWW.ALDERONIND.COM

Page Notes: ---

Ident. Number:	EWS-1858
Part Number:	EWS-1858
Quote Number:	A2004750
Drawn By:	Austin Vandeberg
Checked By:	----
Date:	11/6/2018
Revision Level:	AAA

Sheet Description:

Sheet No:
1 1
Of

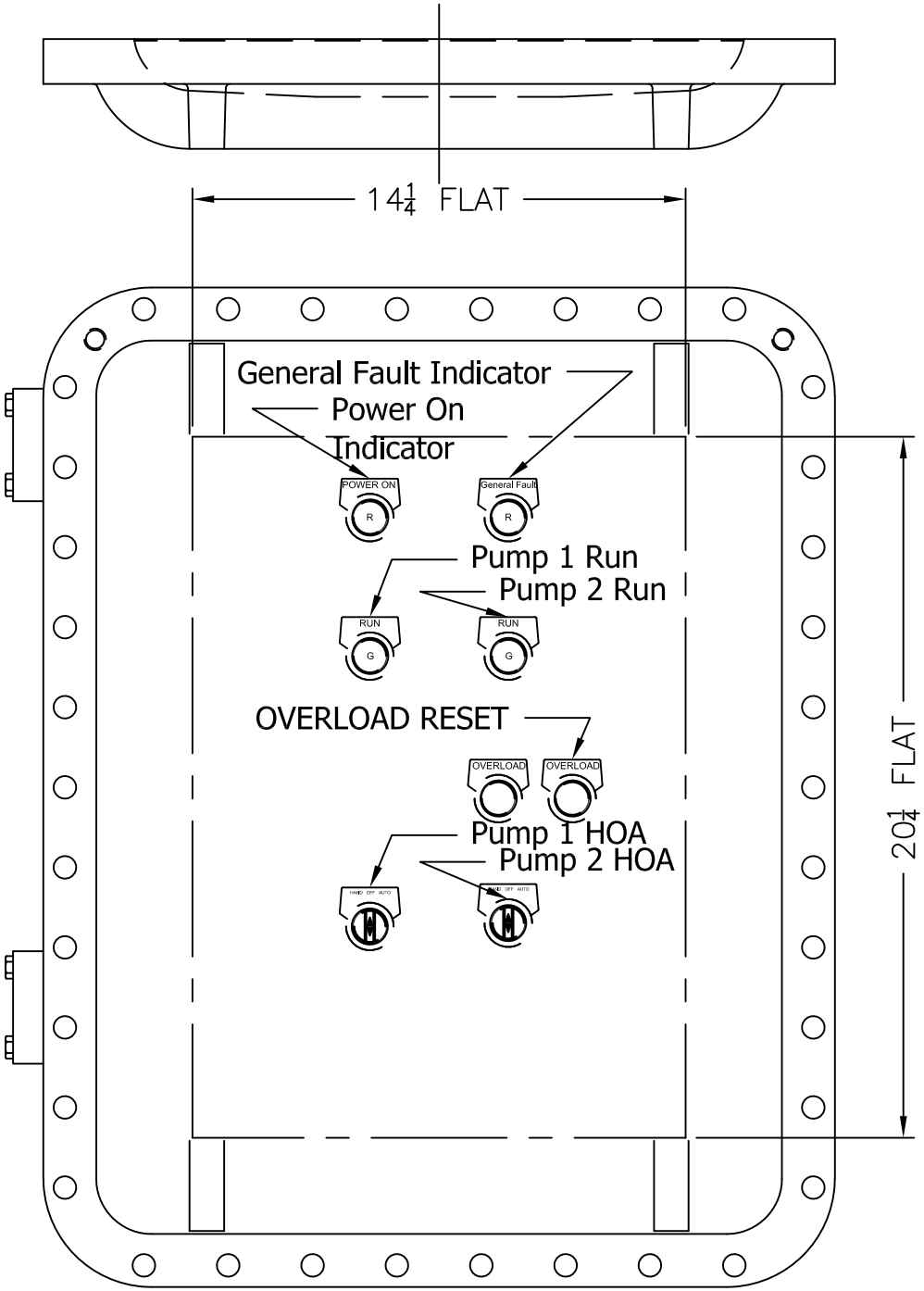

Notes:
1. WARNING! Electrical Shock Hazard! Disconnect power before servicing this product. A qualified service person must install and service this product according to applicable electrical and plumbing codes.
2. Install in accordance with National Electric Code, NFPA 70, Seal all boxes, fittings and conduit with appropriate seal devices to prevent moisture and gases from entering enclosure.
3. Connect all grounds to a good ground. 4. Dashed lines represent field wiring - Use *minimum* 60 deg C Copper Wire 5. Branch Circuit Protection Device/Disconnect Means Field Provided.

ALDERON Industries
Leading Edge Control Products
110 15TH ST. SOUTH
HAWLEY MN. 56549
PH: 218-483-3034 WWW.ALDERONIND.COM

Ident. Number:	EWS-1858
Part Number:	EWS-1858
Quote Number:	A2004750
Drawn By:	Austin Vandeberg
Checked By:	----
Date:	11/6/2018
Revision Level:	AAA

Page Notes: ---

Sheet Description: ----

Sheet No: 1 Of 1

REV	REVISION	BY	ECN	DATE

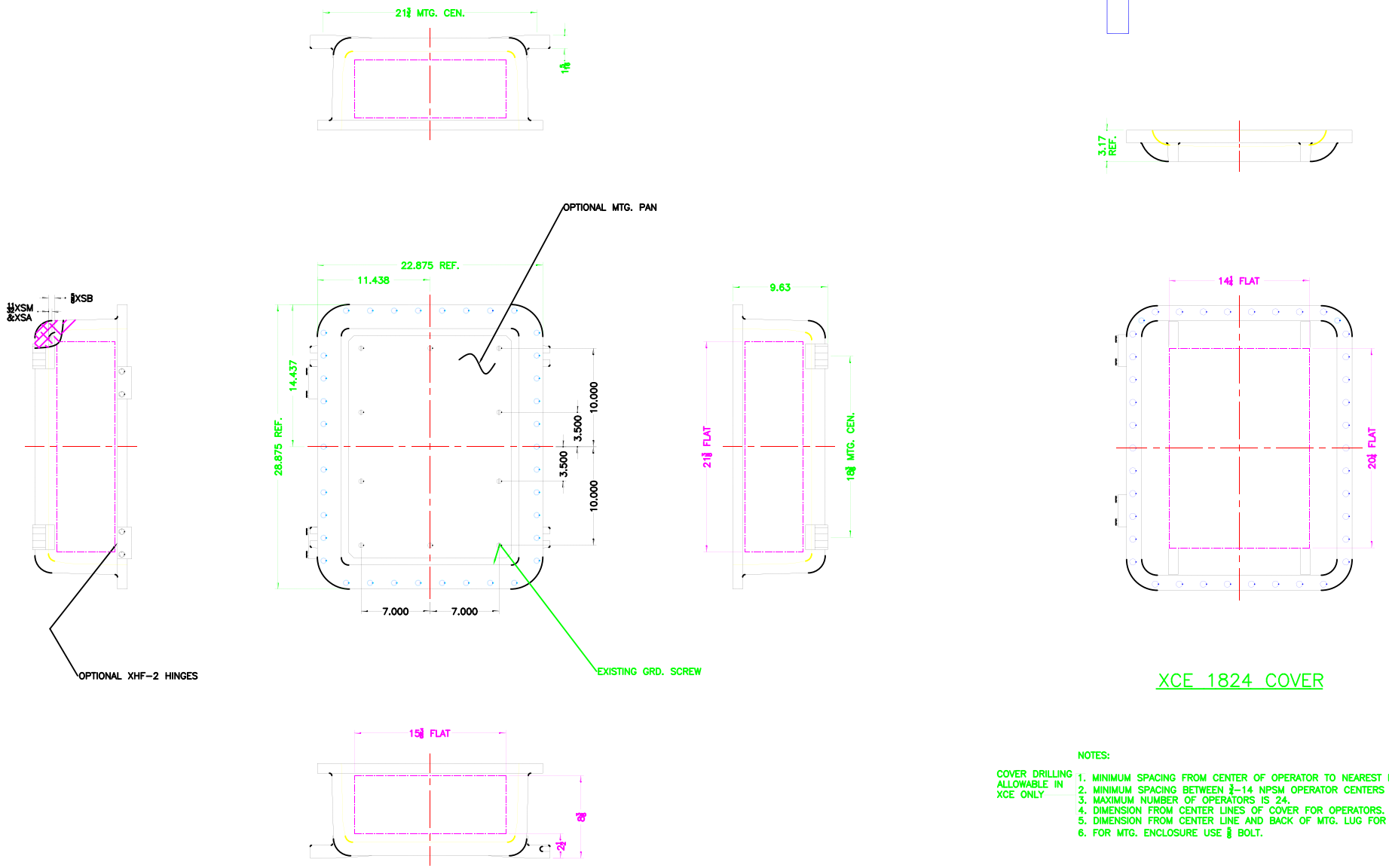

XCE 1824 COVER

COVER DRILLING ALLOWABLE IN XCE ONLY

NOTES:

1. MINIMUM SPACING FROM CENTER OF OPERATOR TO NEAREST FLAT IS 1 1/16.
2. MINIMUM SPACING BETWEEN 3/4-14 NPSM OPERATOR CENTERS IS 3 1/4 FOR THIS ENCLOSURE.
3. MAXIMUM NUMBER OF OPERATORS IS 24.
4. DIMENSION FROM CENTER LINES OF COVER FOR OPERATORS.
5. DIMENSION FROM CENTER LINE AND BACK OF MTG. LUG FOR CONDUIT.
6. FOR MTG. ENCLOSURE USE 3/8 BOLT.

DO NOT SCALE DRAWING
UNLESS OTHERWISE SPECIFIED DIMENSIONS ARE IN INCHES.
CRIT TOLERANCES ON DIMENSIONS NOT CONTROLLED BY TOOLING: ±.125" DIMENS
BREAK CORNERS MAX 1/8"
DRAFT 1 1/2
FILL 1/2
ANGLES ± 1°
MACHINE TOLERANCES ON DWGS. SCALE NOT DIMENSIONS SPECIFIED:
± .125
FILL 1/2 .XXX ± .010"
FILLET RADII .XXX"-.010" R. or 45°
ANGLE ± 0-30'
CORNER BREAK MAX 1/8"
DRILL 1/2 DIAMETER HOLES NOT PRECISION
DRILL 1/2-13 NOT PRECISION
DRILL 5-27-1.0

ADALET
A SCOTT FETZER COMPANY
Enclosure Systems Cable Accessories

NOTICE TO PERSONS RECEIVING THIS DRAWING
THIS DRAWING IS THE PROPERTY OF ADALET, IT IS LOANED UNDER THE FOLLOWING CONDITIONS: THAT IT SHALL BE USED FOR REFERENCE PURPOSES ONLY AND NOT BE LOANED OR COPIED TO PERSONS OTHER THAN THOSE FOR WHOM IT WAS INTENDED, WITHOUT WRITTEN CONSENT OF ADALET. ADALET RETAINS THIS DRAWING AND ALL RIGHTS THEREIN.

MATERIAL
FINISH: TUMBLAST
CAT NO: XCE/XJF 182408

TITLE: MODIFIED XCE/XJF 182408 ENCLOSURE FOR

DRAWN BY	DDH	DATE	11-16-01
ENG APPROVAL		PLOT SCALE	1=5
MFG APPROVAL		DWG SIZE	D
DWG NO		SHT	1OF1
		REV	

XLG-GH-LED-120--Green Pump Run
XLR-GH-LED-120--Red Power On, General Fault

Guarded Pilot Lights for Group B Applications

Class I, Groups B, C & D
Class II, Groups E, F & G
NEMA 3, 4, 7 & 9

c UL us
LISTED 437S

XL Long Series (Panel Mount)

c UL us
LISTED 437S

XLS Short Series (Surface Mount)

Replacement Cap

STANDARD FEATURES

- Explosionproof pilot lights are suitable for long barrel or short barrel applications.
- Sealed construction and can be relamped from the front by removal of lens cap.
- Made with ¾" NPSM threads.
- 8" flexible leads, other lengths on special order, or screw terminal (suffix T).
- All lens caps are black anodized aluminum finish.
- Maximum installation thickness: 1 13/16" on Long Series, ⅝" on Short Series.
- Standard Series-Equipped with candelabra base receptacles and 6 watt 120 volt 6S6 Clear 1500 hr. avg. lamps. Also vailable with 6, 12, 24, 30, 50, 75 and 135 volt lamps. Specify voltage desired.
- Slide Base Series-Equipped with slide base receptacles and 120 volt 5000 hr. avg. lamps with slide base. Also available with 6, 12, 24, 48 and 60 volt lamps. Specify voltage desired.

STANDARD SERIES

Long Barrel Cat #	Short Barrel Cat #	Description	Weight (lbs.)
XLA-GH	XLSA-GH	Amber Lens	½
XLB-GH	XLSB-GH	Blue Lens	½
XLC-GH	XLSC-GH	Clear Lens	½
XLG-GH	XLSG-GH	Green Lens	½
XLR-GH	XLSR-GH	Red Lens	½
XLW-GH	XLSW-GH	White Lens	½

SLIDE BASE SERIES

Long Barrel Cat #	Short Barrel Cat #	Description	Weight (lbs.)
XLAS-GH	XLSAS-GH	Amber Lens	½
XLBS-GH	XLSBS-GH	Blue Lens	½
XLCS-GH	XLSCS-GH	Clear Lens	½
XLGS-GH	XLSGS-GH	Green Lens	½
XLRS-GH	XLSRS-GH	Red Lens	½
XLWS-GH	XLSWS-GH	White Lens	½

*Add suffix T to P/N for screw terminal (Example: XLAST-GH)

REPLACEMENT CAP

Cat #	Description	Weight (lbs.)
XLA-GCH	Amber Lens	⅛
XLB-GCH	Blue Lens	⅛
XLC-GCH	Clear Lens	⅛
XLG-GCH	Green Lens	⅛
XLR-GCH	Red Lens	⅛
XLW-GCH	White Lens	⅛

LED PILOT LIGHTS

Guarded LED Pilot Lights for Group B Applications

Class I, Groups B, C & D
Class II, Groups E, F & G
NEMA 3, 4, 7 & 9

c UL us
LISTED 437S

XL Long Series (Panel Mount)

c UL us
LISTED 437S

XLS Short Series (Surface Mount)

STANDARD FEATURES

- Suitable for panel or surface mount applications. All candelabra base LED lights can be relamped from the front by removal of the lens cap.
- Made with ¾" NPSM threads.
- All LED pilot lights have 8" flexible leads, other lengths on special order, or screw terminal.
- Add suffix T to P/N for screw terminal.
- All lens caps are black anodized aluminum finish with colored glass lens.
- Maximum installation thickness: 1-13/16" on Long Barrel (Long Series), ⅝" on Short Barrel (Short Series).

LED Advantages:

- 10 Year/100,000 hour service life under normal ambient conditions.
- Up to 4x more energy efficient.
- Improved resistance to shock and vibration.
- LEDs operate significantly cooler than traditional lamps.
- Ultra bright cluster LED's.

STANDARD SERIES

Long Barrel Cat #	Short Barrel Cat #	Description	Weight (lbs.)
XLRL-GH	XLSRL-GH	Red	½
XLAL-GH	XLSAL-GH	Amber	½
XLGL-GH	XLSGL-GH	Green	½
XLWL-GH	XLSWL-GH	White	½
XLBL-GH	XLSBL-GH	Blue	½

*Add suffix T to P/N for screw terminal (Example: XLRLT-GH)

120V dual polarity supplied as standard. 5,12,24,48,60 volts optional, consult factory.

*The **ADALET** Engineering Department is Available to Assist you in the Selection of Enclosures and Accessories.*

ATEX Certified LED Pilot Lights

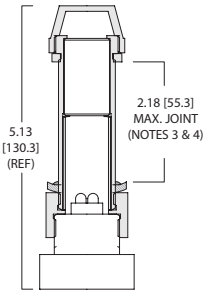

XLX _ _

LONG BODY

STANDARD CAP

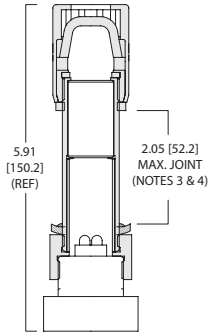

XLX _ _ - G

LONG BODY

CLASSIC GUARDED CAP

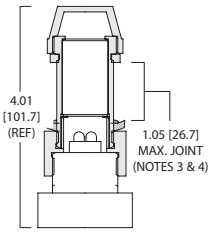

XLXS _ _

SHORT BODY

STANDARD CAP

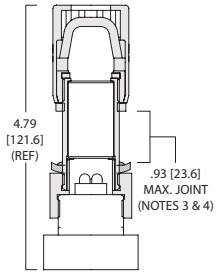

XLXS _ _ - G

SHORT BODY

CLASSIC GUARDED CAP

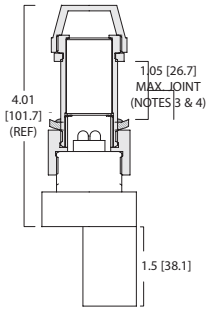

XLXS _ _ 240

SHORT BODY

STANDARD CAP
w/ OPTIONAL 240V BASE

STANDARD FEATURES

- Explosionproof pilot lights are suitable for panel or surface mount applications. Superior Safety Lamps located inside enclosure (not under lens cap) for worry-free operation.
- Configurable: Your choice of color, short or long lengths, guarded or unguarded caps, and 120 or 240 Volt lamps.
- 240 Volt Power Option Use optional resistor type base for 240 Volt applications.
- Low Maintenance 10 year/100,000 service life under normal ambient conditions.
- Efficient 4x more efficient than standard incandescent bulbs.
- Improved Visibility Utilizes ultra-bright cluster LED's.

XLX S R 120 - C _

BASE CATALOG NUMBER

BODY LENGTH [3]

- NONE = Long
- S = Short

COLOR OF LENS & LAMP [2]

- R = Red
- B = Blue
- A = Amber (Yellow)
- W = White
- G = Green

VOLTAGE [1]

- 120, 240 (optional voltages available within range 5-120, consult factory.)

CAP

- NONE = Standard Plastic Lens Cap
- G = Guarded Classic Cap

1 240 Volt lamp requires optional resistor type base (P/N 31216–1). Maximum lamp Voltage is 120.

2 Color of lamp and lens are normally the same. White lamp uses clear lens cap.

3 Minimum length of threaded joint = seven threads (Group B), = five threads (Group C).

4 Maximum installation thickness shown for classic guarded and classic unguarded cap models may be increased .15" by discarding knurled lock ring. Minimum length of threaded joint must be satisfied.

CERTIFICATIONS

ATEX Directive 94/9/EC
EN 60079-0 / EN 60079-1
UL 60079-0 / UL 60079-1
IEC 60079-0 / IEC 60079-1
UL 698 / UL 1203 / CSA C22.2 No.30
UL 50
IEC 60529

0539 Ex II 2 GD Ex d IIB+H2 T6 : -20° C ≤ Ta ≤ +55° C
DEMKO Certificate: 05 ATEX 0530154U
Class I, Zone 1, AEx d IIB+H_2 T6 Tamb -20° C to +55° C
Ex d IIB+H_2 T6 Tamb -20° C to +55° C
Class I, Groups B, C & D; Class II, Groups E, F & G
Type 4, 4X, 7 & 9
IP66

c UL us
LISTED 437S

Selector Switch Operators

XHSS-3-BT2 HOA Switch

Class I, Groups B, C & D
Class II, Groups E, F & G
NEMA 3, 4, 7 & 9

XHSS

XHSSS

XHSSPL

XHSSSPL

XSSL

XSSS

STANDARD FEATURES

- Die cast aluminum alloy. The barrels are all ¾" NPSM thread. Maximum installation thickness: 1 15/16" Long Barrel, ¾" Short Barrel.
- Specify 2 position or 3 position. For 3-position, order must specify cam (see contact block page for contact sequence chart).
- All operators have black molded nylon knobs. The exposed metal parts are black anodized aluminum. Metal caps are also available in blue, gold, clear, red or green with black knobs. Specify colors required.
- Contact blocks are not included with XHSS operators. Select contact block and sequence operating cam from contact block page. (See accessories at end of section)

LONG BARREL				
Catalog #	Cam	# Pos.	Operator Description	Weight (lbs.)
XHSS		2/3	Long Barrel	½
XHSC*		3	Spring Return to Center from Right and Left	½
XHSR2	2	2	Spring Return to Left from Right	½
XHSR		3	Spring Return to Center from Right, Maintain Left	½
XHSL2	4	2	Spring Return to Right from Left	½
XHSL		3	Spring Return to Center from Left, Maintain Right	½
SHORT BARREL				
Catalog #	Cam	# Pos.	Operator Description	Weight (lbs.)
XHSSS		2/3	Short Barrel	½
XHSSC*		3	Spring Return to Center from Right and Left	½
XHSSR2	2	2	Spring Return to Left from Right	½
XHSSR		3	Spring Return to Center from Right, Maintain Left	½
XHSSL2	4	2	Spring Return to Right from Left	½
XHSSL		3	Spring Return to Center from Left, Maintain Right	½

SELECTOR SWITCH		
Catalog #	Operator Description	Weight (lbs.)
XHSSPL	W/padlock device Long Barrel	¾
XHSSSPL	W/padlock device Short Barrel	¾
XSSL-4P	Long Barrel, Four Position	¾
XSSL-5P	Long Barrel, Five Position	¾
XSSS-4P	Short Barrel, Four Position	¾
XSSS-5P	Short Barrel, Five Position	¾

*3 Position Only

LEGEND PLATES AT END OF SECTION

NOTE For extremely wet-dirty location applications, use protective boots. EXCLUDES PADLOCK DEVICES.

Keylock Selector Switch Operators

Class I, Groups B, C & D
Class II, Groups E, F & G
NEMA 3, 4, 7 & 9

STANDARD FEATURES

- The barrels are all ¾" NPSM thread. Max. installation thickness: 1-15/16"Long Barrel, ¾" Short Barrel.
- Selector switch operators can be used as 2 position or 3 position by removal of knob and rotating knob 180°.
- The actuator cam which operates the plungers on the contact blocks can be readily changed for various contact sequences. FOR 3 POSITION, ORDERS MUST STATE CAM NUMBER.
- The exposed metal parts are black anodized aluminum.
- Contact blocks are not included with operators. Select contact block and sequence operating cam from contact block page.

LONG BARREL				
Catalog #	Cam	# Pos.	Operator Description	Weight (lbs.)
XHKSS		2/3	Long Barrel	½
XHKSC*		3	Spring Return to Center from Right and Left	½
XHKSR2	2	2	Spring Return to Left from Right	½
XHKSR		3	Spring Return to Center from Right, Maintain Left	½
XHKSL2	4	2	Spring Return to Right from Left	½
XHKSL		3	Spring Return to Center from Left, Maintain Right	½
SHORT BARREL				
Catalog #	Cam	# Pos.	Operator Description	Weight (lbs.)
XHKSSS		2/3	Short Barrel	½
XHKSSC*		3	Spring Return to Center from Right and Left	½
XHKSSR2	2	2	Spring Return to Left from Right	½
XHKSSR		3	Spring Return to Center from Right, Maintain Left	½
XHKSSL2	4	2	Spring Return to Right from Left	½
XHKSSL		3	Spring Return to Center from Left, Maintain Right	½

FOR 2-POSITION
Key removable in one position only. For key removal in two positions, consult factory.

FOR 3-POSITION
Key normally removable in one position only specify right, center or left. For key removal in more than one position, consult factory.

Potentiometer & Switch Operators

STANDARD FEATURES

- Die cast aluminum alloy. The barrels are all ¾" NPSM thread. ¼" diameter shafts. Maximum installation thickness: 1-15⁄16" panel mount, ¾" surface mount.
- XPO-XPOS have knob and dial marked 1 to 100. Two dial sizes are available.
- XPOC-XPOCS have 15 turn counting dial.
- Operators include 3 pc. coupling and device mounting bracket.
- Potentiometers not furnished, consult factory.

Catalog #	Operator Description	Mounting	Weight (lbs.)
XPO	Plain Dial	Long Barrel	½
XPOL	Plain Dial, Large Size	Long Barrel	½
XPOC	Counting Dial	Long Barrel	¾
XPOS	Plain Dial	Short Barrel	½
XPOSL	Plain Dial, Large Size	Short Barrel	½
XPOCS	Counting Dial	Short Barrel	½

*The **ADALET** Engineering Department is Available to Assist you in the Selection of Enclosures and Accessories.*

Low Ampere QOU

Low Ampere QOU Miniature Circuit Breakers

QOU unit mount miniature circuit breakers (cable-in/cable-out) are ideal for OEM applications. They have the Square D™ circuit breaker's unique Visi-Trip™ feature and can be DIN rail-mounted or surface- or flush-mounted using mounting feet.

General Specifications Common to All Low Ampere QOU Circuit Breakers

- For convenient flush mount, surface mount or DIN mount (symmetrical rail 35 x 7.5 DIN/EN 50 022)
- Single handle with internal common trip
- Terminal lug wire size (1) 14–2 AWG Cu or Al
- Reversible line and load lugs
- Field-installable quick connectors
- UL Listed 48 Vdc (5 k AIR)
- UL Listed as HACR Type: 10–70 A
- High magnetic trip circuit breakers (QOU-HM) are recommended for applications where high initial inrush may occur and for individual dimmer applications.
- For DIN mounting rails, see IEC Starters and Relays, Section 18.

Table 7.20: QOU Low Ampere Miniature Circuit Breakers

Ampere Rating	1P 120/240 Vac		2P 120/240 Vac		2P 240 Vac		3P 240 Vac	
	Cat. No.	$ Price	Cat. No.	$ Price	Cat. No.▲	$ Price	Cat. No.	$ Price
10 k AIR								
10 A	QOU110		QOU210		—		QOU310	
15 A	QOU115		QOU215		QOU215H		QOU315	
20 A	QOU120		QOU220		QOU220H	**168.00**	QOU320	
25 A	QOU125		QOU225		QOU225H		QOU325	
30 A	QOU130	**40.20**	QOU230	**87.00**	QOU230H		QOU330	**285.00**
35 A	QOU135		QOU235		—	—	QOU335	
40 A	QOU140		QOU240		—	—	QOU340	
45 A	QOU145		QOU245		—	—	QOU345	
50 A	QOU150		QOU250		—	—	QOU350	
60 A	QOU160		QOU260		—	—	QOU360	
70 A	QOU170	**78.00**	QOU270	**171.00**	—	—	QOU370	**363.00**
22 k AIR								
15 A	QOU115VH		QOU215VH		—	—	QOU315VH	
20 A	QOU120VH		QOU220VH		—	—	QOU320VH	**426.00**
25 A	QOU125VH		QOU225VH		—	—	QOU325VH	
30 A	QOU130VH		QOU230VH		—	—	QOU330VH	
35 A	QOU135VH	**101.00**	QOU235VH	**189.00**	—	—	—	—
40 A	QOU140VH		QOU240VH		—	—	—	—
45 A	QOU145VH		QOU245VH		—	—	—	—
50 A	QOU150VH		QOU250VH		—	—	—	—
60 A	QOU160VH		QOU260VH		—	—	—	—

▲ QOU-H interrupting rating is 10 kA at 240 Vac.

Table 7.21: QOU-HM Miniature Circuit Breakers (10 k AIR)

Ampere Rating	1P 120/240 Vac		2P 120/240 Vac		2P 240 Vac		3P 240 Vac	
	Cat. No.	$ Price	Cat. No.	$ Price	Cat. No.	$ Price	Cat. No.	$ Price
15 A	QOU115HM	**40.20**	—	—	—	—	—	—
20 A	QOU120HM		—	—	—	—	—	—

Table 7.22: QYU UL1077 Recognized Supplementary Protectors (5 k AIR)

Ampere Rating	1P 277 Vac		2P 120/240 Vac		2P 240 Vac		3P 240 Vac	
	Cat. No.	$ Price	Cat. No.	$ Price	Cat. No.	$ Price	Cat. No.	$ Price
10 A	QYU110		—	—	—	—	—	—
15 A	QYU115		—	—	—	—	—	—
20 A	QYU120	**122.00**	—	—	—	—	—	—
25 A	QYU125		—	—	—	—	—	—
30 A	QYU130		—	—	—	—	—	—

High Ampere QOU

High Ampere QOU Circuit Breakers

General Specifications Common to All High Ampere QOU Circuit Breakers

- Flush mount, surface mount, and DIN rail mount.
- Internal common trip.
- Non-reversible line and load lugs.
- Terminal lug wire size (1) 12– 2/0 AWG Cu or Al.
- UL Listed 60 Vdc per pole (5 k AIR). (**Note:** except switches)
- UL Listed as HACR type, 80–125 A.
- Non-automatic switches have the same physical packaging as miniature circuit breakers, but provide no overcurrent or short circuit protection. They are UL Listed per UL1087 and are CSA certified.

Table 7.23: QOU High Ampere Miniature Circuit Breakers (10 k AIR)

Ampere Rating	1P 120/240 Vac		2P 120/240 Vac		2P 240 Vac		3P 240 Vac	
	Cat. No.	$ Price	Cat. No.	$ Price	Cat. No.	$ Price	Cat. No.	$ Price
80 A	QOU180		QOU280		—	—	QOU380	
90 A	QOU190	**176.00**	QOU290	**246.00**	—	—	QOU390	**416.00**
100 A	QOU1100		QOU2100		—	—	QOU3100	
125 A	—	—	QOU2125	**452.00**	—	—	—	—

Table 7.24: QOU Non-Automatic Switches

Ampere Rating	1P 120 Vac	$ Price	2P 120/240 Vac	$ Price	2P 240 Vac	$ Price	3P 240 Vac	$ Price
	Cat. No.		Cat. No.		Cat. No.		Cat. No.	
60 A	—	—	—	—	QOU200	**87.00**	QOU300	**285.00**
100 A	—	—	—	—	QOU2000	**246.00**	QOU3000	**416.00**
125 A	—	—	—	—	QOU20001	**452.00**	QOU30001	**716.00**

Interrupting Ratings . . . . . Page 7-3
Accessories . . . . . Page 7-12, 7-15
Dimensions. . . . . Page 7-54

© 2012 Schneider Electric
All Rights Reserved

LC1D09

LC1D093

LC1D40A

LC1D115

LRD22

LRD3

E164862
CCN NLDX

LR43364
Class 3211 04

Table 18.3: TeSys D Contactors—3 or 4 Pole, Screw Terminal Connections

Maximum Horsepower Ratings						Maximum Current Utilization Categories		Continuous Current Rating (A)	No. of Poles		Instantaneous Auxiliary Contacts		Catalog Number ▲	$ Price	
Single-Phase		Three-Phase				Inductive AC3 (A)	Resistive AC1 (A)		N.O.	N.C.	N.O.	N.C.		AC Coils	DC Coils
115 V hp	230 V hp	200 V hp	230 V hp	460 V hp	575 V hp										
1/3	1	2	2	5	7.5	9	20	25	3	0	1	1	LC1D09 ♦★▼	**94.00**	**119.00**
—	—	—	—	—	—	—			4				LC1DT20 ♦	**94.00**	**119.00**
—	—	—	—	—	—	—			2	2			LC1D098 ♦	**94.00**	**119.00**
1/2	2	3	3	7.5	10	12	25	25	3	0	1	1	LC1D12 ♦★▼	**119.00**	**149.00**
—	—	—	—	—	—	—			4				LC1DT25 ♦	**119.00**	**149.00**
—	—	—	—	—	—	—			2	2			LC1D128 ♦	**119.00**	**149.00**
1	3	5	5	10	15	18	32	32	3	0	1	1	LC1D18 ♦★	**136.00**	**160.00**
—	—	—	—	—	—	—			4				LC1DT32 ♦	**149.00**	**183.00**
—	—	—	—	—	—	—			2	2			LC1D188 ♦	**149.00**	**183.00**
2	3	7.5	7.5	15	20	25	40	40	3	0	1	1	LC1D25 ♦★	**151.00**	**181.00**
—	—	—	—	—	—	—			4				LC1DT40 ♦	**193.00**	**240.00**
—	—	—	—	—	—	—			2	2			LC1D258 ♦	**193.00**	**240.00**
2	5	10	10	20	25	32	50	50	3	0	1	1	LC1D32 ♦★	**172.00**	**213.00**
3	5	10	10	30	30	40	60	60	3	0	1	1	LC1D40A ♦	**218.00**	**275.00**
—	—	—	—	—	—	—			4		0	0	LC1DT60A♦	**296.00**	**353.00**
3	7.5	15	15	40	40	50	80	70	3	0	1	1	LC1D50A ♦	**234.00**	**291.00**
5	10	20	20	40	50	65		80	3				LC1D65A ♦	**322.00**	**379.00**
—	—	—	—	—	—	—			4	0	0	0	LC1DT80A♦	**446.00**	**503.00**
7.5	15	25	30	60	60	80	125	110	3	0	1	1	LC1D80	**363.00**	**420.00**
—	—	—	—	—	—	—			4		0	0	LC1D80004 ■	**489.00**	**524.00**
—	—	—	—	—	—	—			2	2			LC1D80008 ■	**489.00**	**524.00**
—	—	30	40	75	100	115	200	160	3	0	1	1	LC1D115	**479.00**	**479.00**
—	—	40	50	100	125	150			3				LC1D150	**696.00**	**696.00**
—	—	—	—	—	—	—			4		0	0	LC1D115004	**630.00**	**630.00**

▲ Complete the catalog number by adding the coil voltage code from Table 18.11 on page 18-6 (for example, LC1D09G7).
■ For DC version of these devices, replace the **C** with a **P** (for example, **LC**1D80004•• becomes **LP**1D80004••). This applies only to 80 A, 4-pole devices.
♦ For ring tongue versions of LC1D09–LC1D65A and LC1DT20–LC1DT80A, add **6** to the catalog number prior to adding the voltage code (for example, LC1D09G7 becomes LC1D09**6**G7 and LC1D50AG7 becomes LC1D50A**6**G7). There is no charge for this modification.
★ For spring terminals versions of LC1D09–LC1D65A, add **3** to the catalog number prior to adding the voltage code (for example, LC1D12G7 becomes LC1D12**3**G7 and LC1D40AG7 becomes LC1D40A**3**G7. Note that 40–65 A spring terminals are only on the control terminations and not on power terminations). There is no charge for this modification.
▼ For slip-on connector versions of LC1D09 and LC1D12 only, add **9** to the catalog number prior to adding the voltage code (for example, LC1D09G7 becomes LC1D09**9**G7). There is no charge for this modification.

Table 18.4: TeSys D Overload Relays—Ambient Compensated, Bimetallic, Direct Mounting

Current Setting Range (A)	For Direct Mounting to LC1...	Class 10 with Single-Phase Sensitivity	Class 10 without Single-Phase Sensitivity	Class 20 with Single-Phase Sensitivity	Class 20 without Single-Phase Sensitivity	$ Price
0.10–0.16	D09–D32	LRD01	LR3D01	—	—	**60.00**
0.16–0.25		LRD02	LR3D02	—	—	
0.25–0.40		LRD03	LR3D03	—	—	
0.40–0.63		LRD04	LR3D04	LRD04L	LR3D04L	
0.63–1		LRD05	LR3D05	LRD05L	LR3D05L	
1–1.6		LRD06	LR3D06	LRD06L	LR3D06L	
1.6–2.5		LRD07	LR3D07	LRD07L	LR3D07L	
2.5–4		LRD08	LR3D08	LRD08L	LR3D08L	
4–6		LRD10	LR3D10	LRD10L	LR3D10L	
5.5–8	D09–D32	LRD12	LR3D12	LRD12L	LR3D12L	**62.00**
7–10	D09–D32	LRD14	LR3D14	LRD14L	LR3D14L	
9–13	D12–D32	LRD16	LR3D16	LRD16L	LR3D16L	
12–18	D18–D32	LRD21	LR3D21	LRD21L	LR3D21L	
16–24	D18–D32	LRD22	LR3D22	—	—	
17–24	D18–D32	—	—	LRD22L	LR3D22L	
23–32	D25–D32	LRD32	LR3D32	LRD32L	LR3D32L	**73.00**
30–38	D32	LRD35	LR3D35	—	—	
9-13	D40A-D65A △	LRD313	LR3D313	LRD313L	—	**107.00**
12-18	D40A-D65A △	LRD318	LR3D318	LRD318L	—	
16-25	D40A-D65A △	LRD325	LR3D325	LRD325L	—	
23-32	D40A-D65A △	LRD332	LR3D332	LRD332L	—	
30-40	D40A-D65A △	LRD340	LR3D340	LRD340L	—	
37-50	D40A-D65A △	LRD350	LR3D350	LRD350L	—	
48-65	D50A-D65A △	LRD365	LR3D365	LRD365L	—	
17-25	D40-D80 □	LRD3322	LR3D3322	LR2D3522	LR3D3522	**107.00**
23-32	D40-D80 □	LRD3353	LR3D3353	LR2D3553	LR3D3553	
30-40	D40-D80 □	LRD3355	LR3D3355	LR2D3555	LR3D3555	
37-50	D40-D80 □	LRD3357	LR3D3357	LR2D3557	LR3D3557	
48-65	D50-D80 □	LRD3359	LR3D3359	LR2D3559	LR3D3559	
55–70	D65–D80	LRD3361	LR3D3361	LR2D3561	LR3D3561	**127.00**
63–80	D65–D80	LRD3363	LR3D3363	LR2D3563	LR3D3563	
80–104	D80	LRD3365	—	—	—	
80–104	D115–D150	LRD4365	—	—	—	**362.00**
95–120	D115–D150	LRD4367	—	—	—	
110–140	D150	LRD4369	—	—	—	

△ Overload relays with Everlink termination—direct mount to D40A to D65A only.
□ Direct mount to old D2 style D40 to D65 (no Everlink terminations) and to D80 only.

TeSys D contactor accessories . . . . . pages 18-8 to 18-11
TeSys D overload relay accessories . . . . . page 18-16
TeSys D replacement coils . . . . . page 18-19
Dimensions . . . . . pages 18-40 to 18-46
TeSys T . . . . . pages 16-91

© 2012 Schneider Electric
All Rights Reserved

DPDT CROSS-WIRED DUPLEXOR

ARP Series

- Control duplex loads
- 10A DPDT Cross-Wired Output Configuration when additional capacity is required
- Can be used with two or three Control Switches
- Control voltages of 12, 24, 120 & 240V AC
- Compact plug-in design utilizing industry-standard 8 pin octal socket
- Optional low profile selector switch to lock either load ON first
- 2 LEDs indicate load to energize first
- Pilot Duty Rating

with appropriate socket

MACROMATIC

Better. By Design.

800.238.7474

WWW.MACROMATIC.COM

SALES@MACROMATIC.COM

Alternating Relays with DPDT cross-wired outputs are used in applications requiring both (a) the optimization of load usage by equalizing the run time of two loads and (b) additional capacity in case of excess load requirements. This alternating action is initiated by a control switch, such as a float switch, manual switch, timing relay, pressure switch, or other isolated contact. Each time the initiating switch is opened, the output relay contacts will change state, thus alternating the two loads. Two LEDs indicate which load will energize first.

Alternating Relays with DPDT cross-wired output configurations can be used with two or three control switches. For products with SPDT or DPDT output configurations, see SPDT & DPPT Duplexor.

An optional three position selector switch is offered. This allows a DPDT cross-wired unit to alternate the two loads as normal, or lock the relay to always operate the same load first each time. In this manner, a load that has fewer hours of operation than the other load could be used more often in an effort to eventually balance the run time of both loads.

OUTPUT CONTACTS	CONTROL VOLTAGE	PRODUCT NUMBER	WIRING/SOCKET
DPDT CROSS-WIRED w/o Selector Switch	12V AC 24V AC 120V AC 240V AC	ARP012A3 ARP024A3 ARP120A3 ARP240A3	8 Pin Octal **70169-D** 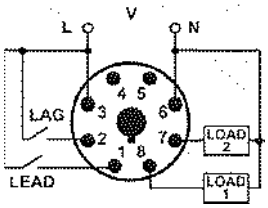 **DIAGRAM 19**
DPDT CROSS-WIRED w/ Selector Switch	12V AC 24V AC 120V AC 240V AC	ARP012A3R ARP024A3R ARP120A3R ARP240A3R	
DPDT CROSS-WIRED w/o Selector Switch	12V AC 24V AC 120V AC 240V AC	ARP012A5 ARP024A5 ARP120A5 ARP240A5	8 Pin Octal **70169-D** 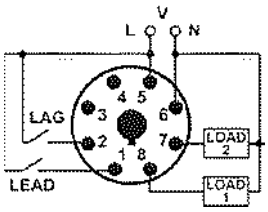 **DIAGRAM 147**
DPDT CROSS-WIRED w/ Selector Switch	12V AC 24V AC 120V AC 240V AC	ARP012A5R ARP024A5R ARP120A5R ARP240A5R	

Sockets & Accessories available

DPDT CROSS-WIRED DUPLEXOR

ARP Series

Application Data

Voltage Tolerances: +10%/-15% of control voltage at 50/60Hz.

Load (Burden): Less than 3VA

Output Contacts:
10A @ 240V AC/30V DC,
1/2HP @ 120/240V AC (N.O.), 1/3HP @ 120/240VAC (N.C.)

Life:
Mechanical: 10,000,000 operations
Full Load: 100,000 operations

Temperature: Operating: -28° to 65°C (-18° to 149°F)
Storage: -40° to 85°C (-40° to 185°F)

Transient Protection: 10,000 volts for 20 microseconds

Indicator LEDs: 2 LEDs marked LOAD A and LOAD B

Optional Selector Switch Settings:
LOAD 1 (always energizes first)
ALTERNATE
LOAD 2 (always energizes first)

Approvals:

File #E109466 File #LR45565 Low Voltage & EMC Directives EN60947-1, EN60947-5-1 with appropriate socket File #E109466

Dimensions

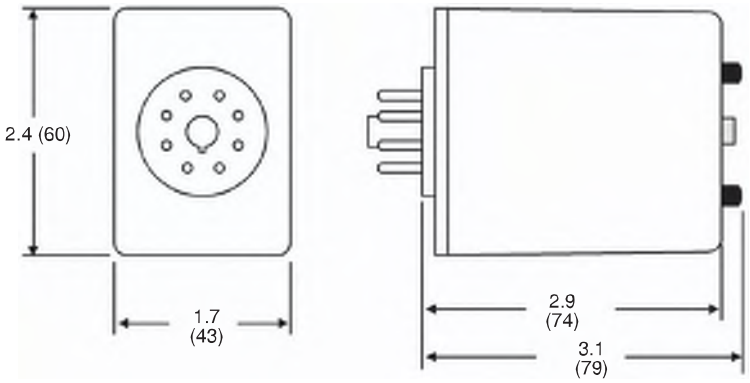

All Dimensions in Inches (Millimeters)

Typical Installations

In the initial off state (diagram below left), both the LEAD Control Switch and the LAG Control Switch are open, the Alternating Relay is in the LOAD 1 position, and both loads are off. The red LED marked "LOAD 1" is ON. When the LEAD Control Switch closes, it energizes Load M1. As long as the LEAD Control Switch remains closed, Load M1 remains energized. If the LAG Control Switch closes, it energizes Load M2. When the LAG Control Switch opens, Load M2 is turned off. When the LEAD Control Switch opens, Load M1 is turned off and the Alternating Relay toggles to the LOAD 2 position. The red LED marked "LOAD 2" is ON. When the LEAD Control Switch closes, it turns on Load M2. If the LAG Control Switch closes, it will energize Load M1. When the LAG Control Switch opens, Load M1 is turned off. When the LEAD Control Switch opens, Load M2 is turned off, the Alternating Relay toggles back to the LOAD 1 position, and the process can be repeated again.

The diagram below right illustrates a type of operation known as "Sequence On - Simultaneously Off (S.O.S.O.)"-the two loads are energized sequentially, but remain on together until the OFF switch is opened.

In the initial OFF state, all three switches are open, the Alternating Relay is in the LOAD 1 position, and both loads are off. No action happens with the Alternating Relay or either load when the OFF Switch closes. When the LEAD Switch closes, Load M1 turns on. When the LAG Switch closes, Load M2 turns on. Both loads remain on as long as all three switches are closed.

When the LAG Switch opens, Load M2 remains on because the OFF Switch is still closed. When the LEAD Switch opens, Load M1 remains on because the OFF Switch is still closed. When the OFF Switch opens, both Load M1 and Load M2 are turned off simultaneously. The Alternating Relay toggles to the LOAD 2 position. The entire cycle is then repeated, but with Load M2 energized first followed by Load M1.

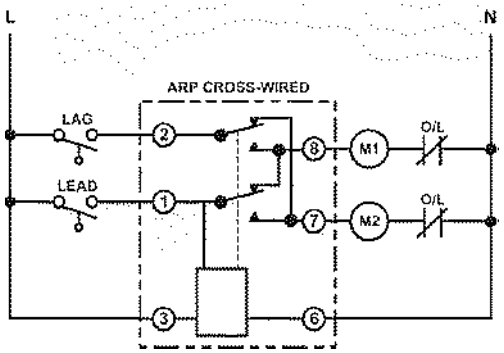

Figure A

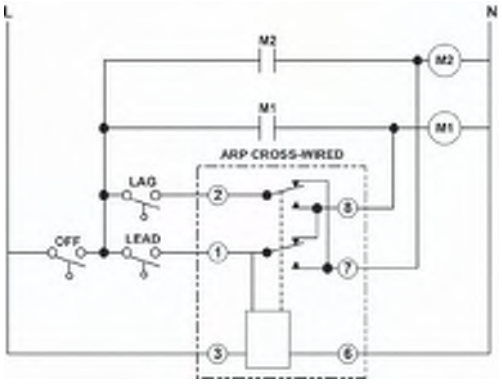

Figure B

SINGLE & DUAL CHANNEL

SFP Series

Single Channel

Dual Channel

- Monitors Submersible Pump Seals for Leakage
- Single or Dual Channel for Monitoring 1 or 2 Pumps
- Two Adjustable Sensitivity Ranges
- Probe is Pulsed with a DC Voltage to Prevent Electroplating
- Low-Profile Adjustment Knob
- Uses industry-standard 8 & 11 pin octal sockets
- Pilot Duty Rating

with appropriate socket

MACROMATIC

Better. By Design.

800.238.7474

WWW.MACROMATIC.COM

SALES@MACROMATIC.COM

SFP Series Pump Seal Failure Relays are designed to monitor the shaft seals of submersible pumps. A resistive-measuring probe is installed in the pump seal cavity. If the seal starts to leak, contaminating fluid enters the seal cavity. This lowers the resistance between the internal probe and the common connection. When the resistance drops below the user-adjustable sensitivity set-point of the relay, the output relay energizes and the LED turns Red ON. The relay output can be used to give an alarm indication of a leaking seal. These products will automatically reset when the fault condition clears.

Three output configurations are offered: an 8 pin SPDT single channel relay and an 11 pin DPDT single channel relay to monitor a single pump, and an 8 pin dual channel relay (with 2 SPNO contacts) to monitor two pumps. Probes are pulsed with a DC voltage to prevent electroplating issues.

CONFIGURATION	INPUT VOLTAGE	SENSITIVITY RANGE	PRODUCT NUMBER	WIRING/ SOCKET ■
SINGLE CHANNEL 8 Pin SPDT	24V AC	4.7K to 100KΩ 1K to 250KΩ	SFP024A100 SFP024A250	8 Pin Octal **70169-D**
	120V AC	4.7K to 100KΩ 1K to 250KΩ	SFP120A100 SFP120A250	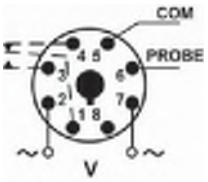
	240V AC	4.7K to 100KΩ 1K to 250KΩ	SFP240A100 SFP240A250	**DIAGRAM 163**
SINGLE CHANNEL 11 Pin DPDT	24V AC	4.7K to 100KΩ 1K to 250KΩ	SFP024B100 SFP024B250	11 Pin Octal **70170-D**
	120V AC	4.7K to 100KΩ 1K to 250KΩ	SFP120B100 SFP120B250	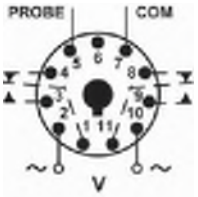
	240V AC	4.7K to 100KΩ 1K to 250KΩ	SFP240B100 SFP240B250	**DIAGRAM 162**
DUAL CHANNEL 8 Pin (2) SPNO	24V AC	4.7K to 100KΩ 1K to 250KΩ	SFP024C100 SFP024C250	8 Pin Octal **70169-D**
	120V AC	4.7K to 100KΩ 1K to 250KΩ	SFP120C100 SFP120C250	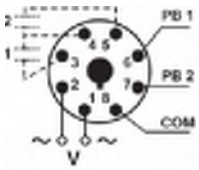
	240V AC	4.7K to 100KΩ 1K to 250KΩ	SFP240C100 SFP240C250	**DIAGRAM 164**

Sockets & Accessories available

SINGLE & DUAL CHANNEL

SFP Series

Application Data

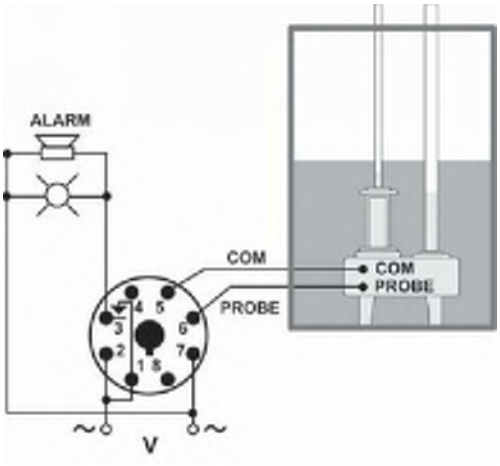

Single Channel (8 Pin SPDT Shown)

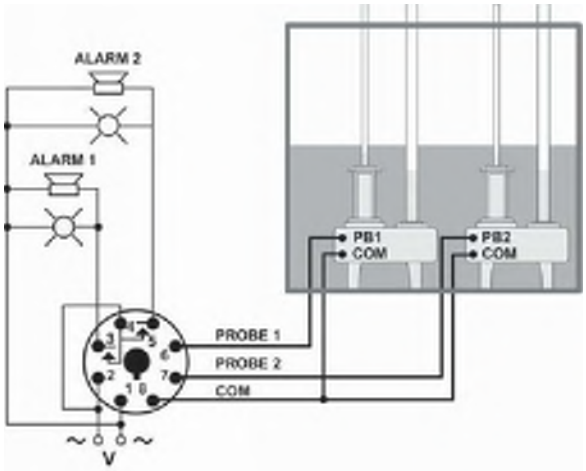

Dual Channel

Voltage Tolerance:
AC Operation: +10/-15% of nominal at 50/60 Hz.

Load (Burden):
3 VA

Probe Voltage:
5V DC Pulsed

Response Time:
Pick-up: 1 Second
Drop-out: 1 Second

LED Indicator:
Green ON with input voltage applied; Red ON when seal leak detected and relay energized

Temperature: Operating: -28° to 65°C (-18° to 149°F)
Storage: -40° to 85°C (-40° to 185°F)

Output Contacts:
Single Channel Relays:
8 Pin SPDT: 10A @ 240V AC / 7A @ 28V DC, 1/4HP @ 120V AC (N.O.)
11 Pin DPDT: 7A @ 240V AC / 7A @ 28V DC, 1/4HP @ 120V AC (N.O.)
Dual Channel Relays:
(2) 5A @ 240V AC / 5A @ 28V DC, 1/4HP @ 120V AC (N.O.)

Life:
Mechanical: 10,000,000 operations
Full Load: 100,000 operations

Mounting:
Requires Industry-Standard 8 Pin Octal Socket (Macromatic 70169-D or equivalent) or 11 Pin Octal Socket (Macromatic 70170-D or equivalent)

Approvals:
File #E109466

with appropriate socket
File #E109466

Dimensions

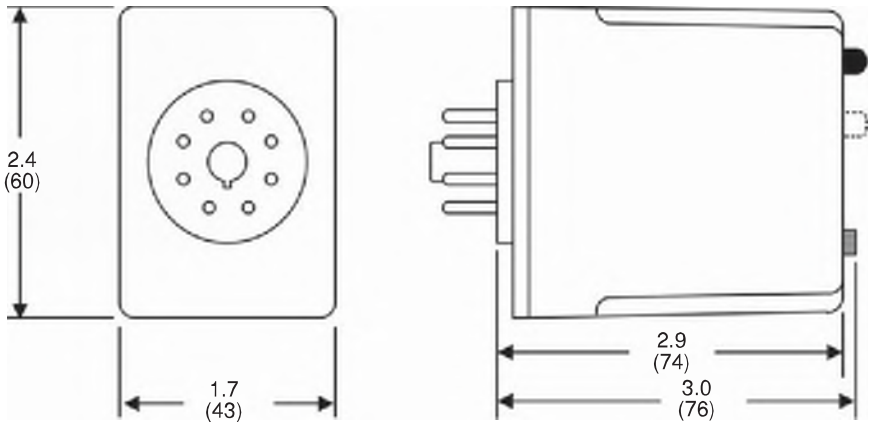

All Dimensions in Inches (Millimeters)

UWZ Series
UWZ48EFlushMount

The UWZ 48 Series is designed to meet IP20 environmental rating for

indoor applications. All models are light grey color with white

numerals on black background. Tenths and hundredths numerals are

yellow. An orange dial adjacent to the hundredths digit provides

running indication.

Specifications

- Bezel: 1.89” x 1.89” (48 x 48mm)
- Capacity: 99,999.99 hours
- Mounting: Surface
- Digits: 7 – 0.16” high
- Voltage: 24, 120, 240, 50 or 60Hz
- Power Consumption: 1VA
- Temperature: –40° to 160°F (–40° to 72°C)
- Termination: Screw Lugs
- Weight: 2.1oz.
- Surface mounted type.
    - Flush mounted with bracket. The UWZ 48E unit fits into a 1.79 x

      1.79in. (45.5 x 45.5mm) cut-out. The thickness of the panel for flush

      mounting can be up to 0.35in. (9mm). The unit is secured in position by

      a plastic slip-on retaining bracket. Also fits square or round openings

      for 72mm meters with optional 72mm bezel.

RSB1A160F7

RSB2A080BD

RSZE1S48M

RSB1A120JD Relay
+ RZM031FPD Socket
+ RSZE1S35M Module

RSB1A160BD Relay
+ RSZE1S48M Socket

Zelio™ RSB Interface Relays

Zelio RSB interface relays and sockets provide the optimum combination of robust performance and space saving for the most demanding applications. Relays are rated at 8 A, 12 A, and 16 A (250 Vac / 28 Vdc). Features include:

- Optional protection modules for protection against electrical transients
- Optional plastic hold-down ejector clips
- Socket or printed circuit board installation options

Refer to Online Relay Configurator.

Table 23.5: Relays (sold in lots of 10)

Coil Voltage	Number and type of contacts - Thermal current (Ith)		
	SPDT (1 C/O) -12 A Res.	SPDT (1 C/O) -16 A Res.	DPDT (2 C/O) -8 A Res.
	Catalog Number[3]	Catalog Number[3]	Catalog Number[3]
6 Vdc	RSB1A120RD	RSB1A160RD	RSB2A080RD
12 Vdc	RSB1A120JD	RSB1A160JD	RSB2A080JD
24 Vdc	RSB1A120BD	RSB1A160BD	RSB2A080BD
48 Vdc	RSB1A120ED	RSB1A160ED	RSB2A080ED
60 Vdc	RSB1A120ND	RSB1A160ND	RSB2A080ND
110 Vdc	RSB1A120FD	RSB1A160FD	RSB2A080FD
24 Vac	RSB1A120B7	RSB1A160B7	RSB2A080B7
48 Vac	RSB1A120E7	RSB1A160E7	RSB2A080E7
120 Vac	RSB1A120F7	RSB1A160F7	RSB2A080F7
220 Vac	RSB1A120M7	RSB1A160M7	RSB2A080M7
230 Vac	RSB1A120P7	RSB1A160P7	RSB2A080P7
240 Vac	RSB1A120U7	RSB1A160U7	RSB2A080U7

Table 23.6: Sockets – 12 A, 300 Vac (sold in lots of 10)

Contact Terminal Arrangement	Connection	For Use with Relays	Catalog Number
Separate[4]	Box lug connector	RSB1A120••	RSZE1S35M
		RSB1A160••[5] RSB2A080••	RSZE1S48M

Table 23.7: Protection Modules (sold in lots of 10)

Description	Compatibility	Voltage	Catalog Number
Diode	RSZ•••••• sockets (RSB series), RGZ•••••• sockets (RXG series)	6–230 Vdc	RZM040W
RC circuit		24–60 Vac	RZM041BN7
		110–240 Vac	RZM041FU7
Diode + green LED		6–24 Vdc	RZM031RB
		24–60 Vdc	RZM031BN
		110–230 Vdc	RZM031FPD
Varistor + green LED		6–24 Vac/Vdc	RZM021RB
		24–60 Vac/Vdc	RZM021BN
		110–230 Vac/Vdc	RZM021FP

Table 23.8: Accessories (sold in lots of 10)

Description	Compatibility	Catalog Number
Plastic hold-down ejector clip	RSZ•••••• sockets (RSB series)	RSZR215
ID tags		RSZL300

Approvals for RSB Relays

File: E173076
CCN: NRNT2, NRNT8

File: 215736
Class: 3211 07

IEC 61810-1

RoHS Compliant

Approvals for RSZ Sockets

File: E173076
CCN: NRNT2, NRNT8

File: 254977
Class: 3211 07

IEC 61810-1

RoHS Compliant

- RZM modules are RoHS compliant.
- For mounting track, see Mounting Track, End Clamps, Jumpers, Fanning Strips, page 24-19.

[3] To order a relay complete with socket (sold in lots of 20): add suffix S to the catalog numbers selected above.
Example: RSB 2A080RD + RSZ E1S48M becomes RSB 2A080RDS.
[4] The inputs and outputs are on separate sides.
[5] When using the RSB1A160•• relay with socket RSZ E1S48M, terminals 11 and 21, 14 and 24, 12 and 22 must be linked.

© 2016 Schneider Electric
All Rights Reserved
9/24/2016

Table 24.10: Screw Type Passthrough

Description		Maximum Voltage	Maximum Current ■	Block				End Barrier ♦			
				Color	Catalog Number	$ Price ea.	Std. Pack ▲	Color	Catalog Number	$ Price ea.	Std. Pack ▲
5.2 mm (0.21 in.) wide	Two Terminals Solid or Stranded Copper Wire 26–12 AWG	600 V	20 A	Grey	NSYTRV22	**1.40**	50	Grey	NSYTRAC22	**0.62**	50
				Blue	NSYTRV22BL	**1.40**		Blue	NSYTRAC22BL	**0.62**	
				Orange	NSYTRV22AR	**1.40**		Grey	NSYTRAC22	**0.62**	
6.2 mm (0.24 in.) wide	Two Terminals Solid or Stranded Copper Wire 26–10 AWG	600 V	00 A	Grey	NSYTRV42	**1.50**	50	Grey	NSYTRAC22	**0.62**	50
				Blue	NSYTRV42BL	**1.50**		Blue	NSYTRAC22BL	**0.62**	
				Orange	NSYTRV42AR	**1.50**		Grey	NSYTRAC22	**0.62**	
				Red	NSYTRV42RD	**1.50**		Grey	NSYTRAC22	**0.62**	
				Green	NSYTRV42GN	**1.50**		Grey	NSYTRAC22	**0.62**	
				White	NSYTRV42WH	**1.50**		Grey	NSYTRAC22	**0.62**	
				Black	NSYTRV42BK	**1.50**		Grey	NSYTRAC22	**0.62**	
8.2 mm (0.32 in.) wide	Two Terminals Solid or Stranded Copper Wire 24–8 AWG	600 V	50 A	Grey	NSYTRV62	**2.10**	50	Grey	NSYTRAC22	**0.62**	50
				Blue	NSYTRV62BL	**2.10**		Blue	NSYTRAC22BL	**0.62**	
10.2 mm (0.40 in.) wide	Two Terminals Solid or Stranded Copper Wire 20–6 AWG	600 V	65 A	Grey	NSYTRV102	**2.70**	50	Grey	NSYTRAC22	**0.62**	50
				Blue	NSYTRV102BL	**2.70**		Blue	NSYTRAC22BL	**0.62**	
12.2 mm (0.48 in.) wide	Two Terminals Solid or Stranded Copper Wire 16–4 AWG	600 V	85 A	Grey	NSYTRV162	**5.40**	50	Grey	NSYTRAC162	**0.93**	50
				Blue	NSYTRV162BL	**5.40**		Grey	NSYTRAC162	**0.93**	
16 mm (0.63 in.) wide	Two Terminals Solid or Stranded Copper Wire 14–1/0 AWG	600 V	150 A	Grey	NSYTRV352	**7.70**	50	Not required for these blocks.			
				Blue	NSYTRV352BL	**7.70**					
20 mm (0.79 in.) wide	Two Terminals Solid or Stranded Copper Wire 6–1/0 AWG	600 V	150 A	Grey	NSYTRV502	**18.80**	50	Not required for these blocks.			
				Blue	NSYTRV502BL	**18.80**					

Table 24.11: Grounding

Description		Block				End Barrier ♦			
		Color	Catalog Number	$ Price ea.	Std. Pack ▲	Color	Catalog Number	$ Price ea.	Std. Pack ▲
5.2 mm (0.21 in.) wide	Grounding Block Solid or Stranded Copper Wire 26–12 AWG	Green/Yellow	NSYTRV22PE	**5.30**	50	Grey	NSYTRAC22	**0.62**	50
6.2 mm (0.24 in.) wide	Grounding Block Solid or Stranded Copper Wire 26–10 AWG	Green/Yellow	NSYTRV42PE	**6.20**	50	Grey	NSYTRAC22	**0.62**	50
8.2 mm (0.32 in.) wide	Grounding Block Solid or Stranded Copper Wire 24–8 AWG	Green/Yellow	NSYTRV62PE	**6.90**	50	Grey	NSYTRAC22	**0.62**	50
10.2 mm (0.40 in.) wide	Grounding Block Solid or Stranded Copper Wire 20–6 AWG	Green/Yellow	NSYTRV102PE	**7.80**	50	Grey	NSYTRAC22	**0.62**	50
0.63 mm (0.16 in.) wide	Grounding Block Solid or Stranded Copper Wire 16–4 AWG	Green/Yellow	NSYTRV162PE	**9.30**	50	Grey	NSYTRAC162	**0.93**	50
16 mm (0.63 in.) wide	Grounding Block Solid or Stranded Copper Wire 14–1/0 AWG	Green/Yellow	NSYTRV352PE	**13.20**	50	Not required for this block.			
20 mm (0.79 in.) wide	Grounding Block Solid or Stranded Copper Wire 6–1/0 AWG	Green/Yellow	NSYTRV502PE	**55.00**	50	Not required for this block.			

▲ Orders must specify the standard package quantity (Std. Pack) or multiples of that quantity.
■ These maximum current values assume the use of insulated copper conductors with 75°C temperature rating and are calculated based on NEC Article 310, Table 310-16. In most cases this value is the maximum ampacity of the wire which has the greatest current carrying capacity. The actual allowable current for a particular application depends on the size, insulation class, and other characteristics of the wire used. The UL ratings are shown. The CSA rating may be higher or lower. Refer to the catalog for CSA ratings.
♦ One end-barrier is required for each assembly of like blocks.

File CCN E87739 XCFR2 File Class 702070 256444 RoHS Compliant

For track and accessories, see page 24-16.

© 2012 Schneider Electric
All Rights Reserved

Table 24.15: Screw Type Blade Isolator

Description		Maximum Voltage	Maximum Current ■	Block				End Barrier ♦			
				Color	Catalog Number	$ Price ea.	Std. Pack ▲	Color	Catalog Number	$ Price ea.	Std. Pack ▲
6.2 mm (0.24 in.) wide	Blade Isolator Two Terminals Solid or Stranded Copper Wire 26–10 AWG	600 V	16 A	Grey	NSYTRV42SC	**7.10**	50	Not required for this block.			
				Grey with Test Points	NSYTRV42ST	**7.10**					
				Orange with Test Points	NSYTRV42STAR	**7.10**					
6.2 mm (0.24 in.) wide	Blade Isolator Double Deck Four Terminals Solid or Stranded Copper Wire 26–10 AWG	300 V	30 A	Grey	NSYTRV42SCD	**9.20**	50	Grey	NSYTRACRE24	**0.83**	50

Table 24.16: Screw Type Component Carrier

Description		Maximum Voltage	Maximum Current ■	Block				Removable Carriers	Description	$ Price ea.	Std. Pack ▲
				Color	Catalog Number	$ Price ea.	Std. Pack ▲	Catalog Number			
6.2 mm (0.24 in.) wide	Component Carrier Two Terminals Solid or Stranded Copper Wire 26–10 AWG	600 V	16 A	Grey	NSYTRV42TB	**3.90**	50	NSYTRASF520	For fuse 5x2 mm	**5.50**	10
								NSYTRASF520M	For fuse 5x20 mm 110–250 V LED	**20.30**	10
								NSYTRASF520B	For fuse 5x20 mm 12–30 V LED	**20.30**	10
								NSYTRASV1	For component	**6.20**	10
								NSYTRASV2	With 1N4007 Diode	**15.60**	10

Table 24.17: Fused Terminal Blocks

Description			Block				End Barrier ♦			
			Color	Catalog Number	$ Price ea.	Std. Pack ▲	Color	Catalog Number	$ Price ea.	Std. Pack ▲
12 mm (0.47 in.) wide	Fuse Block For G-fuse cartridge 5x20 mm Solid or Stranded Copper Wire 26–12 AWG Maximum Voltage 300 V Maximum Current 20 A■	Without Indicator Lamp	Black	NSYTRV162SF	**10.80**	50	Not required for this block.			
8.2 mm (0.32 in.) wide	Lever-Type Fuse For G-fuse cartridge 5x20 mm Solid or Stranded Copper Wire 26–10 AWG Maximum Voltage 600 V Maximum Current 12 A■	Without Indicator Lamp	Black	NSYTRV42SF5	**7.80**	50	Not required for this block.			
		With Light Indicator, 12–30 V AC/DC★	Black	NSYTRV42SF5LD	**16.10**	50				
		With Light Indicator, 110–250 V AC/DC★	Black	NSYTRV42SF5LA	**16.10**	50				
10.2 mm (0.40 in.) wide	Lever-Type Fuse For G-fuse cartridge 6.3x32 mm Solid or Stranded Copper Wire 26–8 AWG Maximum Voltage 600 V Maximum Current 10 A■	Without Indicator Lamp	Black	NSYTRV42SF6	**14.40**	50	Not required for this block.			
		With Light Indicator, 12–30 V AC/DC★	Black	NSYTRV42SF6LD	**18.60**	50				
		With Light Indicator, 110–250 V AC/DC★	Black	NSYTRV42SF6LA	**18.60**	50				

These measuring transducer terminal blocks with screw connection technology are characterized by easy operation and clarity. All switching statuses are clearly visible. Due to the extensive range of flexible accessories, costs and time are saved when executing transducer test circuit tasks.

Table 24.18: Measuring and Grounding Terminal Blocks

Description		Maximum Voltage	Maximum Current ■	Block				End Barrier ♦			
				Color	Catalog Number	$ Price ea.	Std. Pack ▲	Color	Catalog Number	$ Price ea.	Std. Pack ▲
8.2 mm (0.32 in.) wide	Blade Isolator Double Deck Solid or Stranded Copper Wire 24–8 AWG	600 V	30 A	Grey	NSYTRV62TTD	**13.00**	50	NSYTRACT22			
8.2 mm (0.32 in.) wide	Passthrough Solid or Stranded Copper Wire 24–8 AWG	600 V	30 A	Grey	NSYTRV62TT	**13.00**	50	NSYTRACT22			
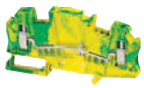 8.2 mm (0.32 in.) wide	Grounding Block Solid or Stranded Copper Wire 24–8 AWG	N/A	N/A	Green/Yellow	NSYTRV62TTPE	**19.00**	50	NSYTRACT22			

▲ Orders must specify the standard package quantity (Std. Pack) or multiples of that quantity.
■ These maximum current values assume the use of insulated copper conductors with 75°C temperature rating and are calculated based on NEC Article 310, Table 310-16. In most cases this value is the maximum ampacity of the wire which has the greatest current carrying capacity. The actual allowable current for a particular application depends on the size, insulation class, and other characteristics of the wire used. The UL rating are shown. The CSA rating may be higher or lower. Refer to the catalog for CSA ratings.
♦ One end-barrier is required for each assembly of like blocks.
★ When voltage is applied within the minimum and maximum limites, the LED will illuminate.

File CCN E87739 XCFR2 File Class 256444 6228-1 RoHS Compliant

For track and accessories, see page 24-16.

© 2012 Schneider Electric
All Rights Reserved

IM1-22Ex-R — Isolation Switch Relays

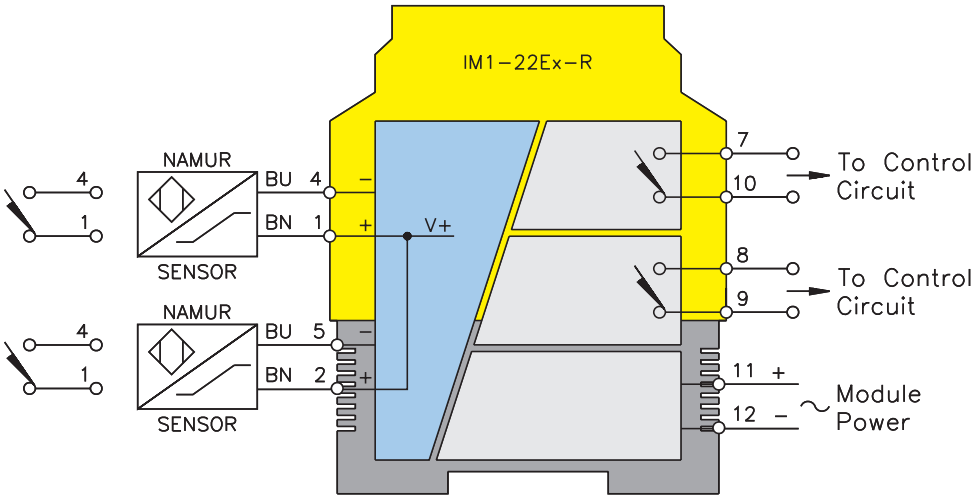

Functional Description:

This 2 channel intrinsically safe interface device is designed to accommodate two switches or NAMUR proximity sensor inputs from a hazardous area and repeat the change of state of the field circuits to a control system located in a non-hazardous area.

The non-hazardous area outputs are two separate SPST switches reflecting the corresponding change of state from each individual input of the field circuit.

Features:

- 2 channel input for NAMUR sensors or mechanical switches
- Monitoring of field wiring for open or short-circuit (if required)
- Configuration switches on top of unit for easy access
- 2 SPST non-hazardous area outputs; 1 for each channel
- Selectable N.O./N.C. outputs

Electrical Parameters:

Inputs: Hazardous Area

Supply Voltage - (20-250 VAC or 20-125 VDC)

Inputs	(8.2 V, 8.2 mA)
Switching Threshold	1.55 mA
Hysteresis	Typical 0.2 mA
Open-circuit Threshold	≤0.1 mA
Short-circuit Threshold	≥6.0 mA

Outputs: Non-Hazardous Area

2 Relays, 1 N.O. Contact Each

Voltage	≥250 VAC/120 VDC
Current	≥2 A per channel
Capacity	≥500 VA / 60 W per channel
Switch Frequency	≥10 Hz
Contacts	Silver-Alloy + Au (3 micro μ)

For entity parameters see control drawings on pages B86 - B91.

Isolation Switch Relays IM1-22Ex-R

Pin #	Terminal Function
1	(+) to Field Device #1
2	(+) to Field Device #2
3	No Connection
4	(-) to Field Device #1
5	(-) to Field Device #2
6	No Connection
7	Non-Hazardous Area Switch #1
8	Non-Hazardous Area Switch #2
9	Non-Hazardous Area Switch #2
10	Non-Hazardous Area Switch #1
11	Module Power (+) or AC
12	Module Power (-) or AC

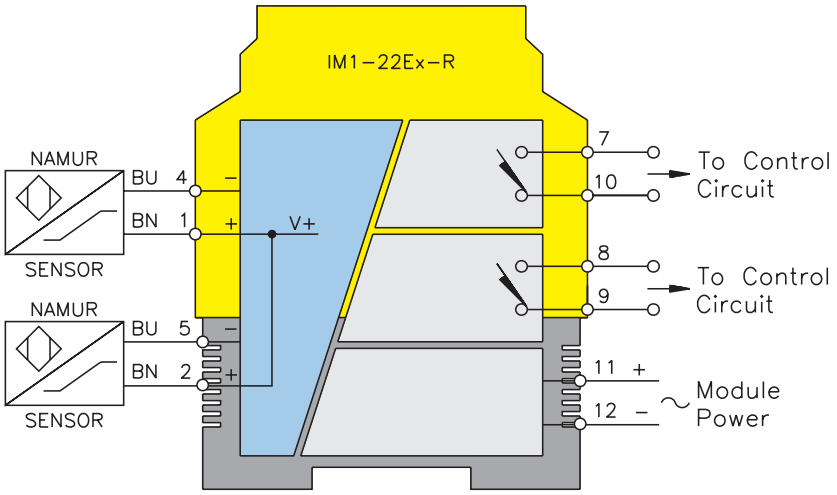

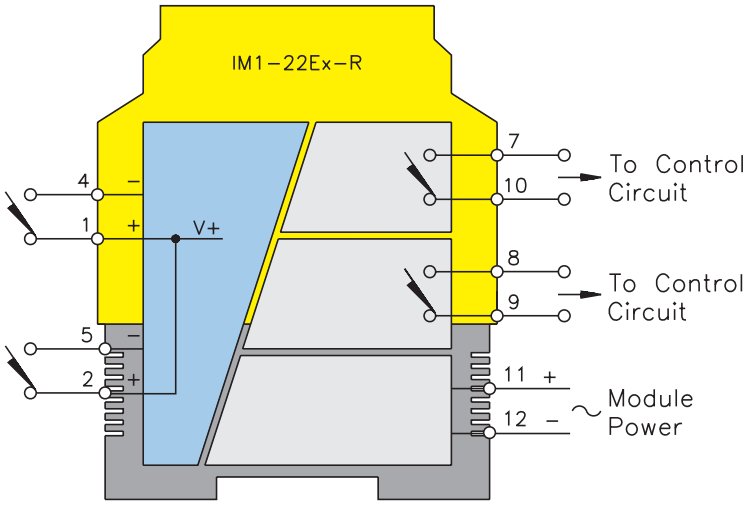

FLOAT SWITCH – PUMP DUTY

2900 MERCURY SERIES – WIDE ANGLE FLOAT SWITCH

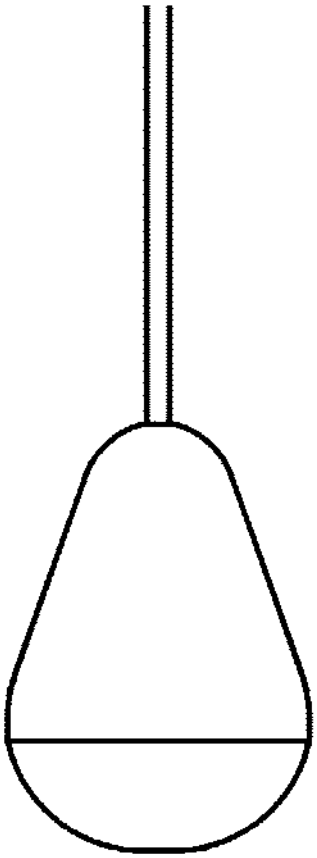

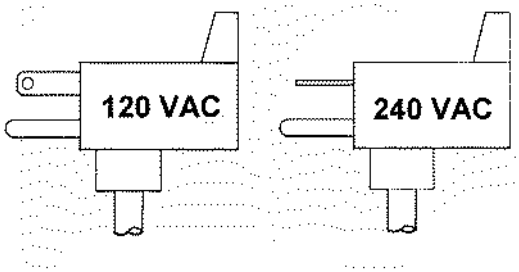

GENERAL

DESIGNED FOR OPERATING SEWAGE PUMPS TO CONTROL LIQUID LEVEL IN SUMPS. THE FLOAT SWITCH CAN ALSO BE UTILIZED TO SIGNIFY SPECIFIC WATER LEVELS OR FOR DIRECT ALARM ACTUATION.

SWITCH VARIATIONS

NORMALLY OPEN (N/O)

THE CONTACTS ARE OPEN (OR OFF) IN THE HANGING POSITION. AS THE FLOAT RISES 45° ABOVE HORIZONTAL, THE CONTACTS BECOME CLOSED AND ACTUATE (TURN ON) THE SWITCH. THIS FLOAT IS GENERALLY USED IN PUMP DOWN APPLICATIONS.

NORMALLY CLOSED (N/C)

THE CONTACTS ARE CLOSED (OR ON) IN THE HANGING POSITION. AS THE FLOAT RISES 45° ABOVE HORIZONTAL, THE CONTACTS BECOME OPEN AND ACTUATE (TURN OFF) THE SWITCH. THIS FLOAT IS GENERALLY USED IN PUMP UP APPLICATIONS.

SINGLE POLE, DOUBLE THROW (SPDT)

A VARIATION OF THE PREVIOUSLY LISTED SWITCHES. THIS FLOAT SWITCH CAN BE WIRED TO OPERATE AS EITHER (BUT NOT BOTH) A NORMALLY OPEN OR NORMALLY CLOSED SWITCH BASED ON THE USER'S NEED.

SWITCH SPECIFICATIONS

2900 SERIES MERCURY FLOAT SWITCHES ARE DESIGNED TO OPERATE UNDER THE FOLLOWING PARAMETERS.

MINIMUM OPERATING TEMPERATURE	-	32 DEGREES F.
MAXIMUM OPERATING TEMPERATURE	-	170 DEGREES F.
ELECTRICAL RATING	-	13 AMP – 120 VAC.
ELECTRICAL RATING	-	½ H.P. @ 120 VAC or 1 H.P. @ 240 VAC
ACTUATION POINT	-	45° ABOVE / BELOW HORIZONTAL.

POWER CORD SPECIFICATIONS

CONDUCTOR CORD – PHYSICAL	-	CHLORINATED POLY ETHYLENE.
ELECTRICAL FOR N/O OR N/C SWITCH	-	16 AWG 2, TYPE SJOOW-300 VOLT.
ELECTRICAL FOR SPDT SWITCH	-	16 AWG 3, TYPE SJOOW-300 VOLT.

OPTIONAL 120 VAC OR 240 VAC PIGGY BACK PLUG

FLOAT SPECIFICATIONS

DURABLE POLYPROPYLENE MATERIAL CONSTRUCTION.
LEAK PROOF, SHOCK PROOF, AND IMPACT RESISTANT.
RESISTANT TO SEWAGE AND WASTEWATER APPLICATIONS.
FOR USE WITH INTRINSICALLY SAFE CIRCUITS. 6" TO 30" PUMPING RANGE

OPTIONAL CORD MOUNTING ASSEMBLIES AVAILABLE (NOT SHOWN)

ZINC PLATED CAST IRON CORD WEIGHT – 1.22 LBS.

POLYPROPYLENE CABLE CLAMP WITH STAINLESS STEEL BAND

c UL us LISTED
IND. CONT. EQ.
47UF

c RU us

CONERY MFG INC 1380 ENTERPRISE PARKWAY ASHLAND, OH 44805
info@conerymfg.com PH (419) 289-1444 FAX (419) 281-0366

2900 SERIES B1,B2

PAGE 1

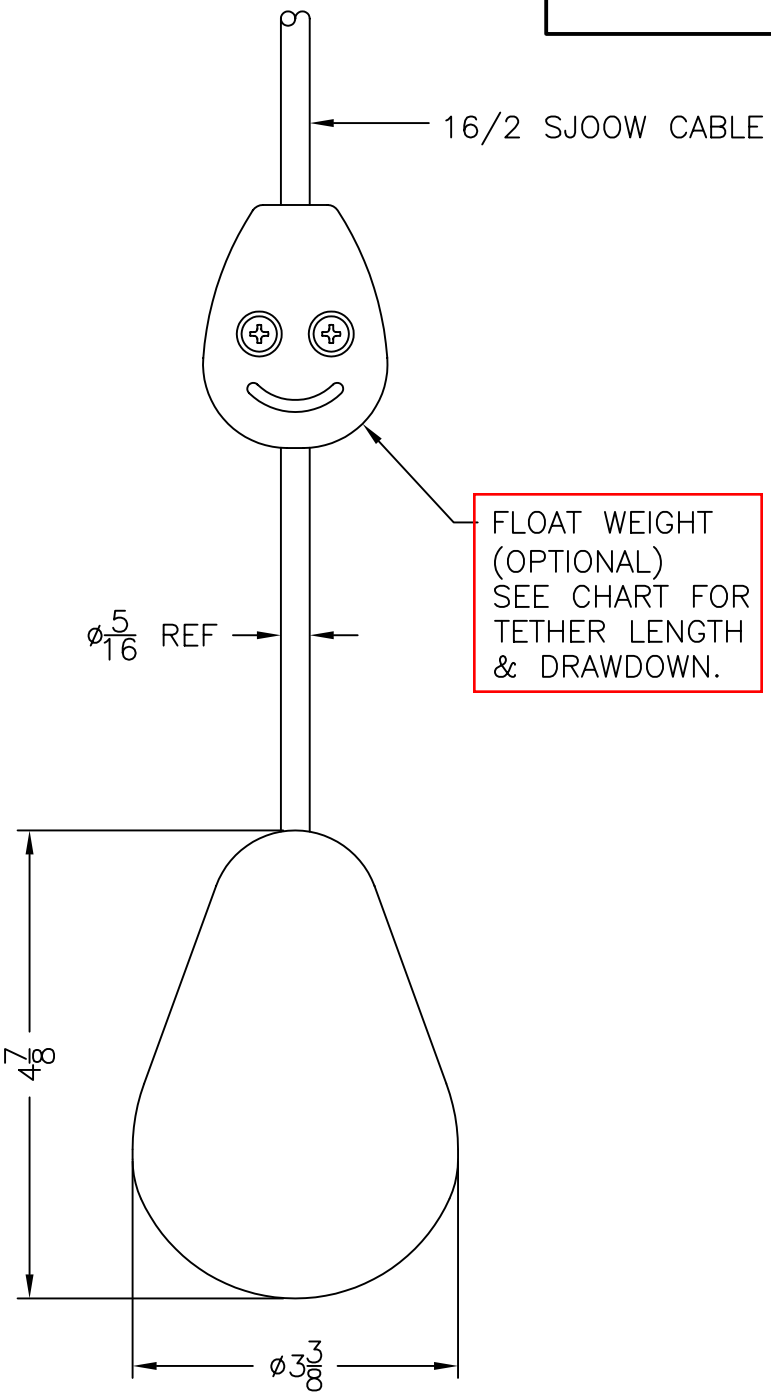

ALL INFORMATION CONTAINED IN THIS DRAWING IS CONFIDENTIAL AND PROPRIETARY TO CONERY MFG, INC.

CONERY MFG INC

CHANGES	TOLERANCES	DRAWN BY	DATE
F	DECIMALS	D. MIDDLETON	03/18/04
E	.XXX = ±.005	MATERIAL SPECIFICATION:	
D	.XX = ±.010	WIDE ANGLE FLOAT SWITCH	
C	FRACTIONAL X/X = ±.1/64		
B	ANGLES		
A	X° = ±1/2°		

SPECIFICATION SHEET
MERCURY FLOAT

SCALE: HALF

PART NO. 2900 SERIES B1,B2

NOTE: ALL ELECTRICAL DIAGRAMS SHOWN ARE EXAMPLES ONLY, CONSULT WITH LOCAL ELECTRICAL AUTHORITIES AND CODES. DO NOT USE THESE PRODUCTS IN GASOLINE, VOLATILES, OTHER COMBUSTIBLES.

2900 SERIES B1, B2

TYPICAL MOUNTING

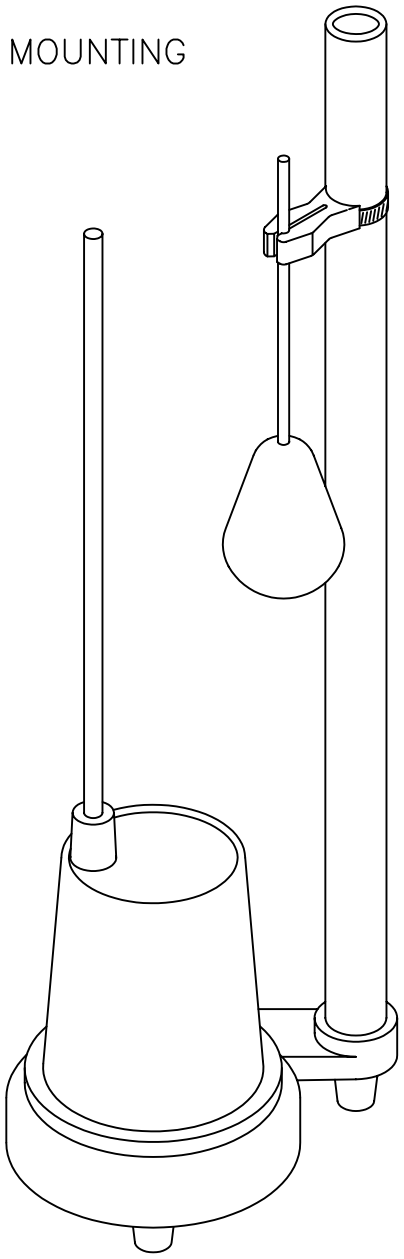

FOR PUMP DOWN USE
(NORMALLY OPEN FLOAT)

FOR PUMP UP USE
(NORMALLY CLOSED FLOAT)

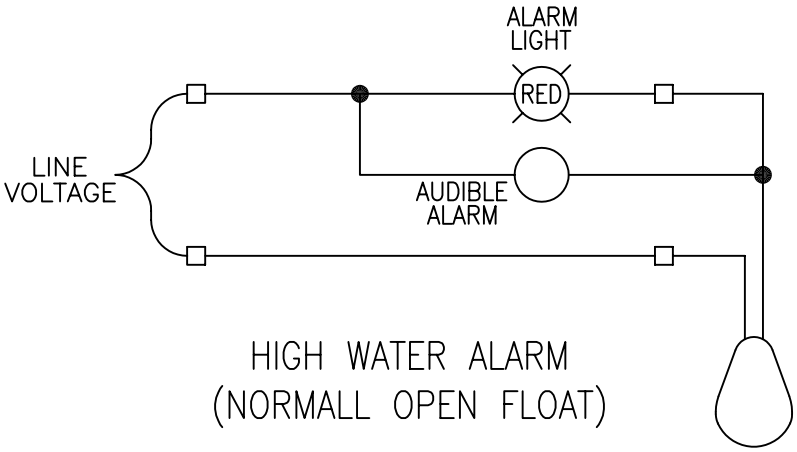

HIGH WATER ALARM
(NORMALL OPEN FLOAT)

ALL INFORMATION CONTAINED IN THIS DRAWING IS CONFIDENTIAL AND PROPRIETARY TO CONERY MFG, INC.

CONERY MFG INC

CHANGES	TOLERANCES	DRAWN BY	DATE
F	DECIMALS .XXX = ±.005 .XX = ±.010 FRACTIONAL X/X = ±.1/64 ANGLES X° = ±1/2°	D. MIDDLETON	03/18/04
E		MATERIAL SPECIFICATION: WIDE ANGLE FLOAT SWITCH	
D			
C			
B			
A			

SPECIFICATION SHEET
MERCURY FLOAT

SCALE: NONE

PART NO. 2900 SERIES B1,B2

quality . service
innovation . integrity

Model 98

Features

This "Flow-Mate" model submersible pump is designed for use in residential or light commercial dewatering applications and can be used to transfer groundwater or effluent. This durable cast iron pump includes a powder coated epoxy finish to prevent corrosion and is designed to provide great heat dissipation from the motor, ensuring a long service life. As with every Zoeller pump, each one is 100% pressure-tested, submerged and run to ensure quality and reliability for years of trouble-free performance! This attention to detail is an inherent feature of every pump, making it one of the most reliable in the industry.

- Automatic models include a float-operated, 2-pole mechanical switch, a stainless steel float guard and switch arm, and a solid, buoyant polypropylene float, which prevents water from filling the float and causing a malfunction.
- For nonautomatic pumps, variable level control systems and containers of various sizes are available for longer cycles.
- Includes a stainless steel handle for easy installation and removal.
- Hermetically sealed to be watertight, dust-tight, and completely submersible.

Reserve Powered Design: For unusual conditions, a reserve safety factor is engineered into the design of every pump.

Specifications

Motor Characteristics

Motor	1/2 HP
Voltage	115 or 230 V
Phase	1 Ph
Hertz	60 Hz
RPM	1725 RPM
Type	Permanent split capacitor
Insulation	Class B
Amps	4.7 - 9.4 Amps

Pump Characteristics

Operation	Automatic or nonautomatic
Auto On/ Off Points	9-1/2" / 3" (24 cm / 8 cm)
Discharge Size	1-1/2" NPT
Solids Handling	1/2" (12 mm) spherical solids
Cord Length	15' (5 m) standard
Cord Type	UL listed
Max Head	23' (7 m)
Max Flow Rate	72 GPM (273 LPM)
Max Operating Temp	130 °F (54 °C)
Cooling	Oil filled
Motor Protection	Auto reset thermal overload

Materials Characteristics

Cap	Cast iron
Motor Housing	Cast iron
Pump Housing	Cast iron
Base	Cast iron
Upper Bearing	Oil-fed cast iron
Lower Bearing	Oil-fed cast iron
Mechanical Seals	Carbon and ceramic
Impeller Type	Non-clogging vortex
Impeller	Engineered plastic
Hardware	Stainless steel
Motor Shaft	AISI 1215 cold roll steel
Gasket	Neoprene

60 Hz

ZOELLER PUMP COMPANY
Zoeller Family of Water Solutions™

FM0973_Ea

Model 98

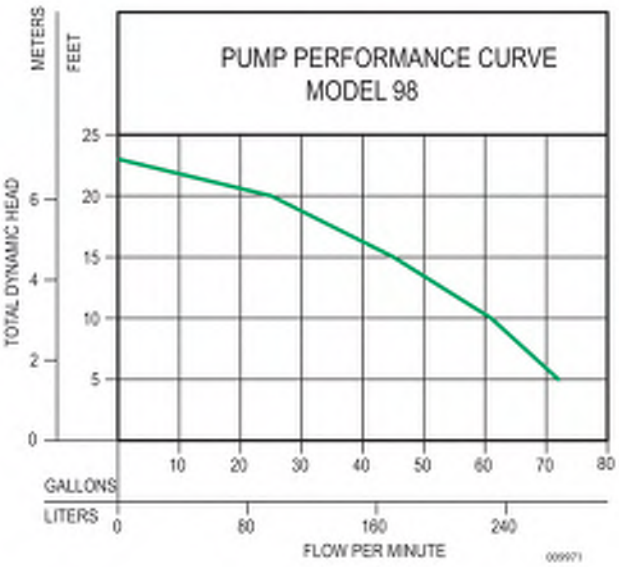

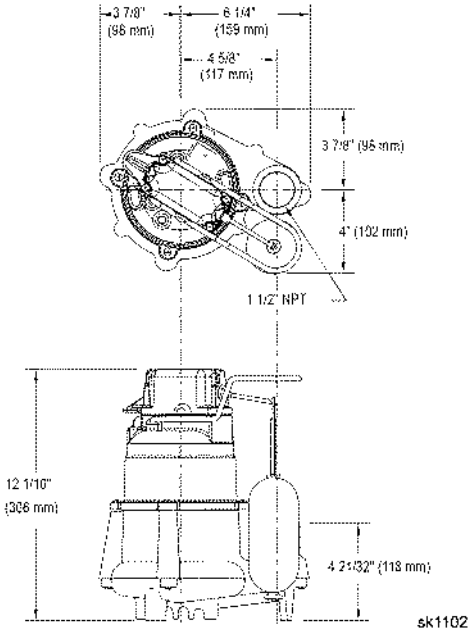

Model

Model Number	Seal	Mode	Volts	Phase	Amps	HP	Hz	Lbs	Kg
M98	Single	Auto	115	1	9.4	1/2	60	36	16

Your Peace of Mind is Our Top Priority®
3649 Cane Run Rd | Louisville, KY 40211 USA
+1 502-778-2731 | 1-800-928-7867 | Fax: +1 502-774-3624
www.zoeller.com

Product information presented here reflects conditions at time of publication. Consult factory regarding discrepancies or inconsistencies. Copyright Zoeller Company. All rights reserved.

Whitman, Requardt & Associates, LLP
Engineers · Architects · Environmental Planners Est. 1915

RESPONSE to R.F.I.

Date Received: 9/17/2018

Date Responded: 10/5/2018
To: Eric Nouglozeh
From: Kumar Kalra/Sekou Brevett/Luis Quintanilla

Subject: Duplex Sump Pump Control Panel
R.F.I. Forwarded by Contractor: LS Fiore

Work Order Number: 13993-003
Contract Number: 01-10-WWTP
Project: City of Cumberland Phase 1 CSO Storage Facility at WWTP

R.F.I Number: 19

Contractor's Question:

See Attached.

Response:

Provide one (1) NEMA 7 control panel that contains the items listed in Specification Section 15442, paragraph 2.02 D. 2. Additional features and hardware like the PLC supplied by the contractor/vendor shall not conflict with the specified requirements.

801 South Caroline Street Baltimore, Maryland 21231
www.wrallp.com · Phone: 410.235.3450 · Fax: 410.243.5716

Leonard S. Fiore, Inc.
GENERAL CONTRACTOR
DEDICATED TO EXCELLENCE
5506 SIXTH AVENUE REAR ALTOONA, PA 16602 PH: (814) 946-3686
www.lsfiore.com Main FX: (814) 946-5288 Proj Mgmt FX: (814) 946-3526

REQUEST FOR INFORMATION
NO. 19-1

TITLE: Follow-up to RFI#19 answer: Duplex Sump Pump Cont. P
PROJECT: CT-0365 Cumberland Tank (CSO Storage)

DATE: 9/18/2018
JOB: CT-0365

To: Paul Rosol, III
Whitman, Requard & Assoc., LLP
801 South Carolina Street
Baltimore, MD 21231

REQUIRED: 9/26/2018
STATUS: Open

CC: Monika Blassino (801 South Caroline Street)

REQUEST:
Please see the attached RFI#19 follow-up letter as it relates to the Duplex Sump Pump Panel enclosure rating.

Received from: SYDNOR HYDRO INC.
Requested by: Leonard S. Fiore, Inc. **Date:** 9/18/18
Signed:
Chris Makdad

ANSWER:

Answered by

Company

Date

SYDNOR ...120 YEARS
HYDRO. . . INC.

September 17, 2018

Leonard S. Fiore, Inc.
Mr. Chris Makdad, Project Manager
5506 6th Ave.
Altoona, PA 16602

Re: Follow-up to engineers response to RFI #19
Specification Section 15442 - Sump Pumps Submittal Package
RFI: Duplex Sump Pump Control Panel (Enclosure Rating)

Dear Mr. Makdad:

We are sending this RFI as follow-up to WRA's response and follow-up clarifications to RFI #19.

Engineer has now stated that control panels, pumps and all associated wiring/controls shall be suitable for class 1 division 1 hazardous areas. The referenced note #3 on power plan drawing E01.01 seems to be directed towards installing electrical contractor and is not related to pumping equipment and/or control panel supply. The note simply states "all wiring and raceway inside CSO storage and corridor area shall be suitable for class 1 Division 1 per NEC. Provide explosion proof seals using RGS conduit." In order to provide pumping and controls/instrumentation equipment that meet class 1 division 1 hazardous area classification we will need engineer to consider following information and specify the details of required equipment:

- We have been informed that there is not a large enough NEMA 7 rated enclosure available on the market to fit all of the required controls inside of a single enclosure. An additional enclosure would need to be furnished to meet all of the control panel requirements. Details would need to be provided on how to divide the equipment among the 2 panels.
- A NEMA 7 rated enclosure does not allow for the following while maintaining classification:
    - Operation of the specified touch-screen HMI without unbolting the panel (approximately 15 bolts) to access screen.
    - Wire termination or troubleshooting without unbolting the panel in the field.

Sydnor Hydro recommends a possible alternative to allow for easy control panel operation and troubleshooting. We suggest the control panel be moved outside of the classified area. To meet electrical and other safety codes a NEMA 7 rated disconnect can be installed inside of the classified area.

We respectfully ask that the engineer provide detailed guidance on what is needed at this location.

We sincerely appreciate your time in addressing this matter.

Best regards,

Jared Wray
Sales Engineer
Sydnor Hydro, Inc.
(804) 643-2725 ext. 228
j.wray@sydnorhydro.com

Christopher M. Makdad

From: Blassino, Monika <mblassino@wrallp.com>
Sent: Thursday, September 13, 2018 11:06 AM
To: Christopher M. Makdad; Rosol III, Paul
Cc: Eric S. Ross; Wilson, James
Subject: RE: RFI#19 answer: Cumberland CSO Tank

Chris,

On Contract Drawing E01.01, general note #3 states class 1, Div. 1 for the corridor.

Monika

From: Christopher M. Makdad <cmakdad@lsfiore.com>
Sent: Wednesday, September 12, 2018 9:47 AM
To: Blassino, Monika <mblassino@wrallp.com>; Rosol III, Paul <pmrosol@wrallp.com>
Cc: Eric S. Ross <eross@lsfiore.com>; Wilson, James <jwilson@wrallp.com>
Subject: RE: RFI#19 answer: Cumberland CSO Tank

Monika / Paul,

Have you had a chance to look into the RFI#19 item below?

Thanks,

Chris Makdad | Project Manager
Leonard S. Fiore, Inc. | General Contractor

5506 6th Ave. | Altoona, PA 16602
T 814.946.3686 | F 814.946.5288
cmakdad@lsfiore.com | www.lsfiore.com

From: Christopher M. Makdad
Sent: Tuesday, September 04, 2018 3:54 PM
To: mblassino@wrallp.com; pmrosol@wrallp.com
Cc: Eric S. Ross <eross@lsfiore.com>
Subject: RFI#19 answer: Cumberland CSO Tank

Monika / Paul,

Related to the answer for RFI#19 (attached), I am having an issue locating where it states in the documents that the corridor is Class 1, Div. 1. Can you please advise where that is called out?

Thanks,

Chris Makdad | Project Manager
Leonard S. Fiore, Inc. | General Contractor

5506 6th Ave. | Altoona, PA 16602
T 814.946.3686 | F 814.946.5288
cmakdad@lsfiore.com | www.lsfiore.com

CONFIDENTIAL – This message and any attachments are confidential, and intended only for the individual or entity named above. If you are not the intended recipient, please do not read, copy, use or disclose this communication to others; also please notify the sender by replying to this message, and then delete it from your system. Thank you.

The information supplied in this message may be privileged, confidential and/or exempt from disclosure under applicable law. If you are not the intended recipient of this message, the sender does not intend delivery to you to waive any privilege or right pertaining to this message. You have no right to retain, disseminate, copy or disclose the material contained herein. If you have received this message in error, please immediately notify the sender by return e-mail, and delete the errant message. Thank you.
WRA_Disclaimer_v20070222a

Whitman, Requardt & Associates, LLP
Engineers · Architects · Environmental Planners Est. 1915

RESPONSE to R.F.I.

Date Received: 11/14/2017

Date Responded: 11/29/2017
To: Eric Nouglozeh
From: Kumar Kalra/Luis Quintanilla

Subject: Duplex Sump Pump Control Panel
R.F.I. Forwarded by Contractor: LS Fiore

Work Order Number: 13993-003
Contract Number: 01-10-WWTP
Project: City of Cumberland Phase 1 CSO Storage Facility at WWTP

R.F.I Number: 19

Contractor's Question:

We are sending this RFI is in response to receiving our Submittal Number 15442-01-034-R1 returned to us marked, "Revise and Resubmit." WRA had the following comment: "Specification Section 15442 requires the use of a NEMA 7 panel for the sump pump control panel located in the Storage Tank Access Corridor. Provide NEMA 7 control panel as required." Specification Section 15442, 2.02.C reads: "Control panel cabinet shall be an enclosure of non-metallic NEMA 7 construction, polycarbonate type." Sydnor Hydro, Inc. assumed this statement to be a typographic error because NEMA 7 rated non-metallic polycarbonate enclosures do not exist. See attached NEMA rating chart for polycarbonate enclosures. By definition a NEMA Type 7 Enclosure is constructed for indoor use in hazardous (classified) locations classified as Class I, Division 1, Groups A, B, C , or D as defined by NFPA 70. Please clarify panel location classification taking all of the shown ventilation into account. Since the submersible pump motors and float switches were not required to be rated as explosion proof, we further assumed this to be an error in the specification. Additionally, intrinsically safe relays were not required to be furnished inside of the control panel, which would be required for equipment installed in a Class I, Division 1 hazardous environment. In summary, we are proposing to furnish a NEMA 4X rated fiberglass enclosure, which is one of the most robust non-metallic enclosure types offered and allows easy operator access to the inner door. Please advise if our proposed NEMA 4X rated panel will accepted for this application, as it appears it will be installed in an area not labeled as a Class I, Division 1, Groups A, B, C, or D location. Alternatively, please advise if the engineer/owner confirms that panel is located in a Class I, Division I classified area and insists on a NEMA 7 rated panel. We would then need to provide an updated proposal to include intrinsically safe relays and explosion proof pumps. We sincerely appreciate your time in addressing this matter.

Response:

Sump Pump control panel is located in Storage Tank Corridor area, which is in fact a classified area. The control panel shall be a NEMA 7 enclosure, regardless whether it is metallic or nonmetallic. A metallic enclosure is acceptable if a nonmetallic option is not available. Per the drawings, submersible sump pump motors and float switches shall also be explosion proof.

801 South Caroline Street Baltimore, Maryland 21231
www.wrallp.com · Phone: 410.235.3450 · Fax: 410.243.5716

Leonard S. Fiore, Inc.
GENERAL CONTRACTOR
DEDICATED TO EXCELLENCE
5506 SIXTH AVENUE REAR ALTOONA, PA 16602 PH: (814) 946-3686
www.lsfiore.com Main FX: (814) 946-5268 Proj Mgmt FX: (814) 946-3526

Attachment A4-2

NO: 288

Please reference the Proj Name, Proj #, and applicable Submittal #'s, RFI#'s, etc. on all correspondence to Leonard S. Fiore, Inc.

PROJECT: Cumberland Tank (CSO Storage)

DATE: 1/4/2019

PROJ #: CT-0365

REF: Change Request - PCO-007 : Pump, Clean & Rework @ Overflow

TO: Paul Rosol, III
Whitman, Requard & Assoc., LLP
801 South Carolina Street
Baltimore, MD 21231

WE ARE SENDING:

- ☐ Shop drawings
- ☐ Letter
- ☐ Prints
- ☐ Change Order
- ☐ Plans
- ☐ Samples
- ☐ Specifications
- ☑ Other: Change Request

SUBMITTED FOR:

- ☐ Approval
- ☐ Your use
- ☐ As Requested
- ☐ Review and Comment

SENT VIA:

- ☐ Attached
- ☑ Separate cover via: Email

ACTION TAKEN:

- ☐ Approved as Submitted
- ☐ Approved as Noted
- ☐ Returned for Corrections
- ☑ "Due Date: 1/18/2019
- ☐ Revise & Resubmit

Item	Copies	Date	No.	Description	Status
Change Request	1	1/4/19	PCO-007	Pump, Clean & Rework @ Overflow	None

Please send all Change Order information to our new Change Management e-mail cm@lsfiore.com or to our office, attention Change Management. **** Please be advised that this is the only copy of the PCO that will be sent. We are no longer sending a hard copy. ****

Notes:

CC:

Signed: _____
Change Management (Leonard S. Fiore, Inc.)

Leonard S. Fiore, Inc.
GENERAL CONTRACTOR
DEDICATED TO EXCELLENCE

5506 6th, Avenue, Rear
Altoona, PA 16602
Ph. (814) 946-3686
Fax: (814) 946-5288

Change Request

To: Whitman, Requardt & Associates
801 South Caroline Street
Baltimore, MD 21231
Attn: Paul Rosol, III

Number: PCO-007
Date: December 14, 2018
Job Description: Cumberland Tank

LSF Job Number: CT-0365

RE: Pump, Clean, and Rework @ Overflow

See below and attached for scope and pricing related to these changes.

Pump water, Clean formwork, rebar, equipment, materials, and Rework waterproofing & forms @ Overflow Chamber due to sewage / storm water infiltration due to holes in the existing overflow chamber walls and pipes.

The total amount to provide this work is **$2,926.39**

If you have any questions, please contact me at 814-946-3686

Submitted by: Chris Makdad
Project Manager

CHANGE ORDER SUMMARY

PCO-007 - Pump, Clean, and Rework @ Overflow

CONTRACTOR NAME****

Contractor/Subcontractor Name	Total (from cost breakdown)	Markup on sub (if applicable)**	Total
1. Leonard S. Fiore, Inc.	$2,897.41		$2,897.41
2.			$0.00
3.			$0.00
4.			$0.00
5			$0.00
6			$0.00
7			$0.00
		Total (L/M/E/S)	$2,897.41
		Bond	$28.97
		TOTAL THIS CHANGE	**$2,926.39**

COST BREAKDOWN

CONTRACTOR NAME PRIME

Leonard S. Fiore, Inc.

LABOR COST

Classification	Certified Payroll Base Rate *	Fringe Benefits (as defined by L&I) *	Total Hourly Rate	Hours	Total
Carpenter	$27.86	$15.25	$43.11	21.5	$926.87
Laborer	$19.44	$16.95	$36.39	21.5	$782.39
			$0.00		$0.00
				Sub-Total	**$1,709.25**

On Base Labor Rate ONLY			
Social Security @	7.65%		$77.80
Medicare @	0.80%		$8.14
Unemployment @	10.89%		$110.75
Workmans Compensation @	9.63%		$97.93
Public Liability Insurance @	2.23%		$22.68
Small Tools @	2.00%		$20.34
		Sub-Total	**$337.63**

** Labor Markup (15.00%) $307.03

TOTAL LABOR **$2,353.91**

MATERIAL COST (attach material list if necessary, insert totals as shown)

Item	Quantity	Unit	Unit Cost	Total Cost
Bleach	10	Gal	$4.02	$40.20
				$0.00
				$0.00
			Sub-Total	**$40.20**

**Applicable Sales Tax $2.41

** Material Markup (15.00%) $6.39

MATERIAL TOTAL **$49.00**

EQUIPMENT COST (equipment cost for owned equipment (depreciation, insurance, etc.) or documentation supporting lease of equipment)

Classification	Hour Rate		Hours	Total Cost
Pressure Washer	$20.00		21.5	$430.00
				$0.00
				$0.00
			Sub-Total	**$430.00**

** Equipment Markup (15.00%) $64.50

EQUIPMENT TOTAL **$494.50**

LME TOTAL **$2,897.41**

Leonard S. Fiore, Inc.
GENERAL CONTRACTOR
DEDICATED TO EXCELLENCE

TIME AND MATERIAL

JOB NAME:	CUMBERLAND TANK	**DATE:**	9/10,-9/19,-9/20,-10/2/18
JOB NUMBER:	CT-0365	**COMPANY:**	
TICKET #:			

MANPOWER USED:		**HOURS:**	**EQUIPMENT USED:**	**HOURS:**
Dale Wannyn	9/19/18	19 9	pressure washer	9
Mike Culp	9/19/18	9		
Dale Wannyn	9/20/18	9 4.5	pressure washer	4.5
Mike Culp	9/20/18	4.5		
Dale Wannyn	10/2/18	10 8	pressure washer	8
Mike Culp	10/2/18	8		
TOTAL MAN HOURS:		✓ 43	**TOTAL EQUIPMENT HOURS:**	21.5

MATERIALS USED:		**PO #**
10 gallon bleach	$4.02 ea.	
plastic sprayer	no charge	

DECRIPTION OF WORK:

clean new construction at overflow chamber , due to heavy rain and contaminated water leaking/leaching out of exi

COMPANY REP. SIGNATURE: Hourly Equipment only [illegible] 10/26/18

Attachment A4-3

Leonard S. Fiore, Inc.
GENERAL CONTRACTOR
DEDICATED TO EXCELLENCE
5506 SIXTH AVENUE REAR ALTOONA, PA 16602 PH: (814) 946-3686
www.lsfiore.com Main FX: (814) 946-5288 Proj Mgmt FX: (814) 946-3526

NO: 306

Please reference the Proj Name, Proj #, and applicable Submittal #'s, RFI#'s, etc. on all correspondence to Leonard S. Fiore, Inc.

PROJECT: Cumberland Tank (CSO Storage)

DATE: 2/27/2019

PROJ #: CT-0365

REF: Change Request - PCO-008 : Existing 54in. Pipe Replacement @ Overflow Chamber

TO: Paul Rosol, III
Whitman, Requard & Assoc., LLP
801 South Carolina Street
Baltimore, MD 21231

WE ARE SENDING:

- ☐ Shop drawings
- ☐ Plans
- ☐ Letter
- ☐ Samples
- ☐ Prints
- ☐ Specifications
- ☐ Change Order
- ☑ Other: Change Request

SUBMITTED FOR:

- ☐ Approval
- ☐ Your use
- ☐ As Requested
- ☐ Review and Comment

SENT VIA:

- ☐ Attached
- ☑ Separate cover via: Email

ACTION TAKEN:

- ☐ Approved as Submitted
- ☐ Approved as Noted
- ☐ Returned for Corrections
- ☑ "Due Date: 3/13/2019
- ☐ Revise & Resubmit

Item	Copies	Date	No.	Description	Status
Change Request	1	2/27/19	PCO-008	Existing 54in. Pipe Replacement @ Overflow Chamber	None

Please send all Change Order information to our new Change Management e-mail cm@lsfiore.com or to our office, attention Change Management. **** Please be advised that this is the only copy of the PCO that will be sent. We are no longer sending a hard copy. ****

Notes:

CC:

Signed: _____
Change Management (Leonard S. Fiore, Inc.)

Leonard S. Fiore, Inc.
GENERAL CONTRACTOR
DEDICATED TO EXCELLENCE

5506 6th, Avenue, Rear
Altoona, PA 16602
Ph. (814) 946-3686
Fax: (814) 946-5288

Change Request

To: Whitman, Requardt & Associates
801 South Caroline Street
Baltimore, MD 21231
Attn: Paul Rosol, III

Number: PCO-008
Date: February 4, 2019
Job Description: Cumberland Tank

LSF Job Number: CT-0365

RE: T&M Existing 54in. Pipe Replacement @ Overflow Chamber

See below and attached for scope and pricing related to these changes.

Replace 54" pipe section at the overflow chamber due to existing pipe being filled with debris and the pipe being in poor condition. Work performed under T&M.

The total amount to provide this work is **$17,785.93**

If you have any questions, please contact me at 814-946-3686

Submitted by: Chris Makdad
Project Manager

Chris Makdad /Rm

CHANGE ORDER SUMMARY

PCO-008 - T&M Existing 54in. Pipe Replacement @ Overflow Chamber

CONTRACTOR NAME****

Contractor/Subcontractor Name	Total (from cost breakdown)	Markup on sub (if applicable)**	Total
1. Leonard S. Fiore, Inc.	$17,609.83		$17,609.83
2.			$0.00
3.			$0.00
4.			$0.00
5			$0.00
6			$0.00
7			$0.00
		Total (L/M/E/S)	$17,609.83
		Bond	$176.10
		TOTAL THIS CHANGE	**$17,785.93**

COST BREAKDOWN

CONTRACTOR NAME PRIME

Leonard S. Fiore, Inc.

LABOR COST

Classification	Certified Payroll Base Rate *	Fringe Benefits (as defined by L&I) *	Total Hourly Rate	Hours	Total
Carpenter	$27.86	$15.25	$43.11	6	$258.66
Pipe Laborer	$14.27	$2.04	$16.31	6.5	$106.02
Foreman	$57.00		$57.00	7	$399.00
Operator	$20.47	$10.20	$30.67	21.5	$659.41
Truck Driver	$22.02	$17.71	$39.73	13.5	$536.36
Concrete Finisher	$19.88	$4.88	$24.76	4	$99.04
				Sub-Total	**$2,058.48**

On Base Labor Rate ONLY

Social Security @	7.65%	$82.38
Medicare @	0.80%	$8.61
Unemployment @	10.89%	$117.26
Workman's Compensation @	9.63%	$103.70
Public Liability Insurance @	2.23%	$24.01
Small Tools @	2.00%	$21.54
	Sub-Total	**$357.50**
** Labor Markup (	15.00%)	$362.40
TOTAL LABOR		**$2,778.37**

MATERIAL COST (attach material list if necessary, insert totals as shown)

Item	Quantity	Unit	Unit Cost	Total Cost
FRP pipe (2ea. 20lnft)	2	Ea.	$3,600.00	$7,200.00
Concrete	1	CY	$125.00	$125.00
			Sub-Total	**$7,325.00**

**Applicable Sales Tax		$439.50
** Material Markup (	15.00%)	$1,164.68
MATERIAL TOTAL		**$8,929.18**

EQUIPMENT COST (equipment cost for owned equipment (depreciation, insurance, etc.) or documentation supporting lease of equipment)

Classification	Hour Rate		Hours	Total Cost
245 Case Excavator	$162.23		13.5	$2,190.11
350 Case Excavator	$216.85		6.5	$1,409.53
Shaker head compactor	$28.04		1	$28.04
Triaxle	$102.48		13.5	$1,383.48
Fork truck	$80.85		1.5	$121.28
			Sub-Total	**$5,132.43**

** Equipment Markup (	15.00%)	$769.86
EQUIPMENT TOTAL		**$5,902.29**
LME TOTAL		**$17,609.83**

JOB NAME Cumberland Tank
JOB NO. CT-0365
ADDRESS Cumberland MD.
SUPERVISOR Eric Ross

DAILY JOB REPORT

DATE 10-24-18 WEATHER Sunny
TEMPERATURE #1 AM PM
SEE REVERSE SIDE FOR ADDITIONAL SPACE ▶

EMPLOYEES

EMPLOYEE / CLASSIFICATION	RATE	HRS.	WORK PERFORMED
Dale Wannyn/operator		1.5	move materials
Total		1.5	

MATERIAL

QTY.	MATEBIAL RECEIVED	QTY.	MATERIAL USED
	N/A		

EQUIPMENT

ON PROJECT	HRS.	RENTED	RATE	HRS.
Forklift w/operator	1.5			

SUBCONT.

NAME	WORK PERFORMED

DESCRIPTION OF WORK

- move materials for access to remove + Replace 54" storm Pipe from Existing Junction box to SPMH 2.

CHANGE ORDER NO.

WORK APPROVED BY Jamie Wilson

DAILY JOB REPORT

JOB NAME Cumberland Tank.
JOB NO. CF-03165
ADDRESS Cumberland MD.
SUPERVISOR Eric Ross

DATE 10-25-18 WEATHER Sunny
TEMPERATURE #2 AM PM
SEE REVERSE SIDE FOR ADDITIONAL SPACE ▶

7:30 - 3:00

EMPLOYEES

EMPLOYEE / CLASSIFICATION	RATE	HRS.	WORK PERFORMED
Kevin Ginnick		7	operator
Galen Despot		7	truck driver
Total		14	

MATERIAL

QTY.	MATERIAL RECEIVED	QTY.	MATERIAL USED

EQUIPMENT

ON PROJECT	HRS.	RENTED	RATE	HRS.
245 Case Track hoe	7			
Triaxle 09	7			

SUBCONT.

NAME	WORK PERFORMED

DESCRIPTION OF WORK

- Demo Existing 54" Conc Pipe, stone base

CHANGE ORDER NO.

WORK APPROVED BY James Wilson

JOB NAME Cumberland Tank
JOB NO. CT-0365
ADDRESS Cumberland Md.

SUPERVISOR Eric Ross

DAILY JOB REPORT

DATE 10-26-18 WEATHER Cloudy
TEMPERATURE #3 AM PM

7:30 -

SEE REVERSE SIDE FOR ADDITIONAL SPACE ▶

EMPLOYEES

EMPLOYEE / CLASSIFICATION	RATE	HRS.	WORK PERFORMED
Mike Harlow		7	Foreman
Kevin Gimick		6.5	Operator 245
Brad Gates		6.5	Labor
Scott Dively		6.5	Operator 350
Terry Gardner		6.5	Truck Driver
Total		33	

MATERIAL

QTY.	MATERIAL RECEIVED	QTY.	MATERIAL USED
2	54" x 20'-0" Hobus Frp pipe		
2	2B stone No charge		

EQUIPMENT

ON PROJECT	HRS.	RENTED	RATE	HRS.
245 Case Trackhoe	6.5			
350 Case Trackhoe	6.5			
Triaxle 09	6.5			
Compactor	1			

SUBCONT.

NAME	WORK PERFORMED

DESCRIPTION OF WORK

CHANGE ORDER NO.

WORK APPROVED BY Daniel Wilson

DAILY JOB REPORT

JOB NAME Cumberland Tank
JOB NO. CT-0365
ADDRESS Cumberland Md.
SUPERVISOR Eric Ross

DATE 10-29-18 WEATHER
TEMPERATURE AM PM
SEE REVERSE SIDE FOR ADDITIONAL SPACE ▶

EMPLOYEES

EMPLOYEE / CLASSIFICATION	RATE	HRS.	WORK PERFORMED
Dale Wagnyn		2	Form cont collar, Carp.
Mike Culp		2	" Carp.
Total		4	

MATERIAL

QTY.	MATERIAL RECEIVED	QTY.	MATERIAL USED
	Form mat. (No charge)		

EQUIPMENT

ON PROJECT	HRS.	RENTED	RATE	HRS.

SUBCONT.

NAME	WORK PERFORMED

DESCRIPTION OF WORK

Form for concrete pipe collar @ overflow junction box to River.

CHANGE ORDER NO.

WORK APPROVED BY James T. Wilson

JOB NAME Cumberland Tank
JOB NO. CT-0365
ADDRESS Cumberland Md.

SUPERVISOR Eric Ross

DAILY JOB REPORT

DATE 10-30-18 WEATHER
TEMPERATURE AM PM

SEE REVERSE SIDE FOR ADDITIONAL SPACE ▶

EMPLOYEES

EMPLOYEE / CLASSIFICATION	RATE	HRS.	WORK PERFORMED
Dale Wannyn		2	Pour cont. collar finisher
Mike Culp.		2	" " Finisher
Dale Wannyn		1	Strip form 11-1-18 Carp
Mike Culp		1	Strip forms 11-1-18 carp
Total		6	

MATERIAL

QTY.	MATERIAL RECEIVED	QTY.	MATERIAL USED
	Concrete	1 yd.	

EQUIPMENT

ON PROJECT	HRS.	RENTED	RATE	HRS.

SUBCONT.

NAME	WORK PERFORMED

DESCRIPTION OF WORK

Pour concrete pipe collar @ overflow junction box to River.

CHANGE ORDER NO.

WORK APPROVED BY James Wilson

Christopher M. Makdad

From: Paul DePalatis <paul.depalatis@cumberlandmd.gov>
Sent: Friday, October 19, 2018 9:20 AM
To: Wilson, James; Eric S. Ross
Cc: Guy R. Fiore, Sr.; Robert Smith; Mark E. Campolongo; Christopher M. Makdad
Subject: Re: Pipe debris: CSO Tank Cumberland

Please proceed.

Jim,

Please process the paperwork. Any questions, let either me or Bobby know. I'm out today, but can be reached by phone.

Thanks.

Paul

On Thu, Oct 18, 2018 at 6:23 PM Christopher M. Makdad <cmakdad@lsfiore.com> wrote:
Paul that would be my best guesstimation at this point in time. I will look at it further tomorrow morning to try to nail something down better. We can do T and M which will ensure that you get the best price possible. This will also allow us to move on it immediately.

Chris Makdad

Sent via the Samsung Galaxy S7, an AT&T 4G LTE smartphone

-------- Original message --------
From: Paul DePalatis <paul.depalatis@cumberlandmd.gov>
Date: 10/18/18 2:40 PM (GMT-05:00)
To: "Christopher M. Makdad" <cmakdad@lsfiore.com>
Cc: "Wilson, James" <jwilson@wrallp.com>, "Eric S. Ross" <eross@lsfiore.com>, "Guy R. Fiore, Sr." <gfioresr@lsfiore.com>, Robert Smith <robert.smith@cumberlandmd.gov>
Subject: Re: Pipe debris: CSO Tank Cumberland

Please confirm the cost to replace the pipe is $4k+$4k+$3k = $11K. If not, please advise what it is. We are strongly inclined to have you replace the pipe.

On Thu, Oct 18, 2018 at 11:47 AM Christopher M. Makdad <cmakdad@lsfiore.com<mailto:cmakdad@lsfiore.com>> wrote:
Paul,

Please see attached for the picture of the 54 inch pipe that is full of debris. As discussed we would be able to replace this pipe with the 54-inch we have on-site but would need to replace that for later on in the project. The approximate cost for the pipe will be $4,000 per 20-foot stick. We are assuming this is approximately 36 ft long. The labor would be approximately $3,000 to replace the pipe. We would be willing to do this on a T&M basis.

We are in the process of getting ready to set the new manhole so would need to have an answer fairly quickly.

Thank you,

Chris Makdad

Sent via the Samsung Galaxy S7, an AT&T 4G LTE smartphone
CONFIDENTIAL – This message and any attachments are confidential, and intended only for the individual or entity named above. If you are not the intended recipient, please do not read, copy, use or disclose this communication to others; also please notify the sender by replying to this message, and then delete it from your system. Thank you.
CONFIDENTIAL – This message and any attachments are confidential, and intended only for the individual or entity named above. If you are not the intended recipient, please do not read, copy, use or disclose this communication to others; also please notify the sender by replying to this message, and then delete it from your system. Thank you.

Regular Council Agenda
April 2, 2019

Description
Order approving the Community Legacy Central Business District Facade Improvement application for 128 Bedford Street for the amount of $4,987.50

Approval, Acceptance / Recommendation

☐ Budgeted

☐ 1st Reading
☐ 2nd Reading
☐ 3rd Reading

Value of Award (if applicable)
$4,987.50

Source of Funding (if applicable)
Community Legacy: 114.199AH.CFP.20100

- ORDER -

of the

Mayor and City Council of Cumberland

MARYLAND

ORDER NO. _____ **DATE:** April 2, 2019

ORDERED, By the Mayor and City Council of Cumberland, Maryland

THAT, the following Community Legacy funded Central Business District Façade Improvement Program project application be and is hereby approved.

Mr. James R. Brant, Jr.	128 Bedford Street	$4,987.50
Total		$4,987.50

_____

Raymond M. Morriss, Mayor

Community Legacy : 114.199AH.CFP.20100

DEPARTMENT OF COMMUNITY DEVELOPMENT

TO: MAYOR AND CITY COUNCIL

JEFF RHODES, MARGIE WOODRING

FROM: KATHY MCKENNEY

SUBJECT: FAÇADE IMPROVEMENT GRANT PROGRAM STAFF RECOMMENDATION

DATE: 3/28/19

I would like to recommend that the remaining balance from the 2017 Community Legacy-funded Central Business District Façade Grant Program be allocated as follows:

128 Bedford Street	Mr. James R. Brant, Jr.	$4,987.50

This funding was originally targeted to a façade improvement project at 228-234 North Centre Street, however the property owner was unable to move forward with the project and, since all funds are to be expended by the end of June according to the funding agreement, this alternative project will be ready to proceed once all required permit and compliance reviews are complete.

Total	$4,987.50	($50,000.00 Community Legacy 114.199AH.CFP.20100 – All program funds now obligated)

Regular Council Agenda
April 2, 2019

Description

Order authorizing the award of $31,817.00 in Community Legacy Funds through the Leasehold Improvement Program to three projects located in the Central Business District: 70 Pershing Street - $13,125.00; 206 N. Centre Street - $9,346.00; and 208 N. Centre Street - $9346.00

Approval, Acceptance / Recommendation

☐ Budgeted

☐ 1st Reading
☐ 2nd Reading
☐ 3rd Reading

Value of Award (if applicable)

$31,817.00

Source of Funding (if applicable)

- ORDER -

of the

Mayor and City Council of Cumberland

MARYLAND

ORDER NO. _____ **DATE:** April 2, 2019

ORDERED, By the Mayor and City Council of Cumberland, Maryland

THAT, the following projects be and are hereby awarded a total of Thirty-one Thousand, Eight Hundred Seventeen Dollars ($31,817.00) in Community Legacy Funding through the Central Business District Leasehold Improvement Program:

Project	Location	Amount of Award
Cuts of Encouragement	70 Pershing Street	$ 13,125.00
Paloma Yoga	206 N. Centre Street	9,346.00
Paloma Collective	208 N. Centre Street	9,346.00
Total		**$ 31,817.00**

_____

Raymond M. Morriss, Mayor

DEPARTMENT OF COMMUNITY DEVELOPMENT

TO: MAYOR AND CITY COUNCIL

JEFF RHODES, MARGIE WOODRING

FROM: KATHY MCKENNEY

SUBJECT: SECOND ROUND CL17 LEASEHOLD IMPROVEMENT PROGRAM STAFF RECOMMENDATION

DATE: 3/19/19

A total of four applications were received by the March 1, 2019 deadline for the second round of the Community Legacy funding received in the 2017 program year application for the Leasehold Improvement program. The total amount of funding received from the Community Legacy Program is $75,000. In October 2018, a total of $43,183.00 was obligated to three projects during the first application round, leaving $31,817.00 to award during the latest round. The program is designed to assist new lessees of commercial space or existing lessees within the Central Business District who plan to increase their amount of leased space. The maximum grant funding for any one property is $15,000 for eligible expenses such as drywall, electrical improvements, flooring, mechanical, lighting, accessibility improvements, and signs. Following staff review of the proposals on March 19, 2019, the following applications are recommended for approval:

Project Address	Contact Person	Business	Recommended Funding
70 Pershing Street	Garrett Eagan	Cuts of Encouragement	$13,125.00
206 North Centre St	Jennifer Walsh	Paloma Yoga	$9,346.00
208 North Centre St	Jennifer Walsh	Paloma Collective	$9,346.00
		Total	**$31,817.00**

Since the amount of funding requested ($58,125.00) exceeded the far exceeded the available amount of remaining funding, the recommendation was based upon the average points score for each application and resulted in partial funding for two of the three projects.

Please let me know if I can help to provide additional information.